Illustrated Parts Manual

Model

1230ES

P/N
3121223

December 8, 2014

ANSI

CE

An Oshkosh Corporation Company

REVISION LOG

NOTES:

NOTE: Country of Manufacture - The 1230ES Scissor Lifts are manufactured by JLG Industries in the following countries: USA, France and China. Refer to the Serial Number Tag to identify the country of manufacture. Machines manufactured in the USA will have a serial number prefix of 02 (i.e. 02XXXXXXXX), machines manufactured in France will have a prefix of A2 (i.e. A2XXXXXXXX) and machines manufactured in China will have a prefix of B2 (i.e. B2XXXXXXXX).

NOTE: Production in France starts August 2006 & ends February 2010 with S/N A200009897.

NOTE: Drive Module Identification - The module is located inside the frame. Open the left side battery door and identify the drive module by part number or visual identification before ordering parts. (See illustration below). Also, identify the country of manufactured by referring to the S/N nameplate before ordering parts (See note above).
USA built machines: Machines built prior to S/N 0200203195 use the 1600346 Drive Module. Machines with S/N 0200203195 to Present use the 1001092456 Drive Module.
French built machines: All machines use the 1600346 Drive Module.
China built machines: All machines use the 1001092456 Drive Module.

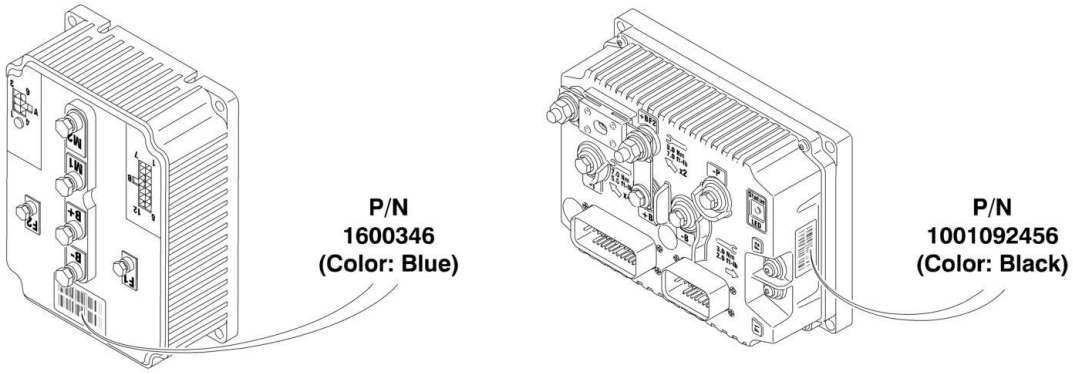

MANUAL REVISION LOG:

April 12, 2013 - Revised Manual (Edited to B/M 0010670 Revision 19)

July 31, 2006 - Original Issue of Manual (Edited to B/M 0010670 Revision 4)

January 15, 2007 - Revised Manual (Edited to B/M 0010670 Revision 6)

August 1, 2007 - Revised Manual (Edited to B/M 0010670 Revision 8)

February 15, 2008 - Revised Manual (Edited to B/M 0010670 Revision 8)

August 15, 2008 - Revised Manual (Edited to B/M 0010670 Revision 11)

August 12, 2009 - Revised Manual (Edited to B/M 0010670 Revision 11)

March 1, 2010 - Revised Manual (Edited to B/M 0010670 Revision 12)

November 1, 2010 - Revised Manual (Edited to B/M 0010670 Revision 17)

April 8, 2011 - Revised Manual (Edited to B/M 0010670 Revision 18)

July 14, 2011 - Revised Manual (Edited to B/M 0010670 Revision 19)

October 7, 2011 - Revised Manual (Edited to B/M 0010670 Revision 19)

January 12, 2012 - Revised Manual (Edited to B/M 0010670 Revision 19)

REVISION LOG

June 22, 2012 - Revised Manual (Edited to B/M 0010670 Revision 19)

August 21, 2012 - Revised Manual (Edited to B/M 0010670 Revision 19)

January 7, 2013 - Revised Manual (Edited to B/M 0010670 Revision 19)

April 12, 2013 - Revised Manual (Edited to B/M 0010670 Revision 19)

July 9, 2013 - Revised Manual (Edited to B/M 0010670 Revision B)

October 8, 2013 - Revised Manual (Edited to B/M 0010670 Revision B)

December 8, 2014 - Revised Manual (Edited to B/M 0010670 Revision D)

GENERAL INFORMATION

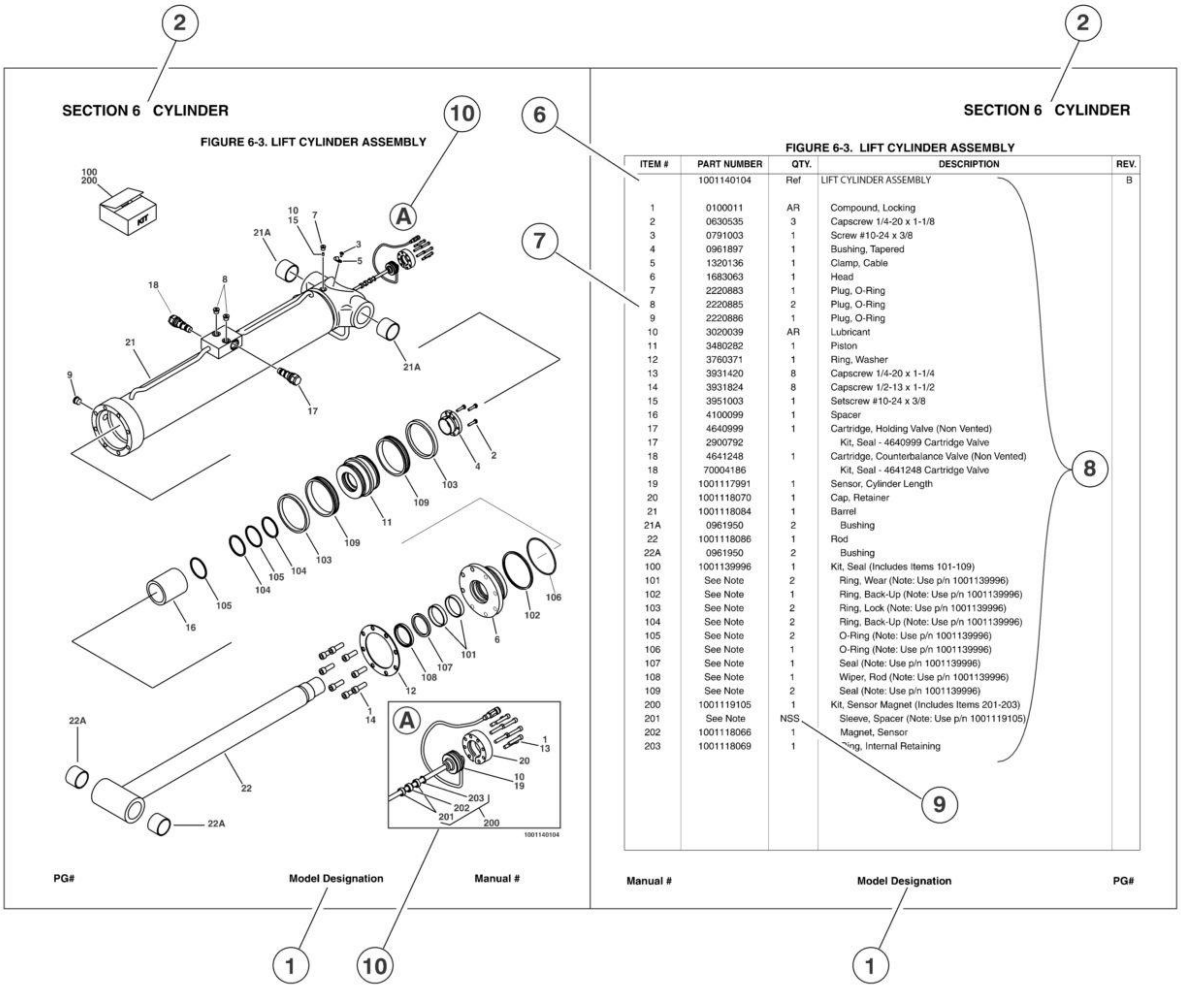

ITEM #	PART NUMBER	QTY.	DESCRIPTION	REV.
	1001140104	Ref	LIFT CYLINDER ASSEMBLY	B
1	0100011	AR	Compound, Locking	
2	0630535	3	Capscrew 1/4-20 x 1-1/8	
3	0791003	1	Screw #10-24 x 3/8	
4	0961897	1	Bushing, Tapered	
5	1320136	1	Clamp, Cable	
6	1683063	1	Head	
7	2220883	1	Plug, O-Ring	
8	2220885	2	Plug, O-Ring	
9	2220886	1	Plug, O-Ring	
10	3020039	AR	Lubricant	
11	3480282	1	Piston	
12	3760371	1	Ring, Washer	
13	3931420	8	Capscrew 1/4-20 x 1-1/4	
14	3931824	8	Capscrew 1/2-13 x 1-1/2	
15	3951003	1	Setscrew #10-24 x 3/8	
16	4100099	1	Spacer	
17	4640999	1	Cartridge, Holding Valve (Non Vented)	
17	2900792		Kit, Seal - 4640999 Cartridge Valve	
18	4641248	1	Cartridge, Counterbalance Valve (Non Vented)	
18	70004186		Kit, Seal - 4641248 Cartridge Valve	
19	1001117991	1	Sensor, Cylinder Length	
20	1001118070	1	Cap, Retainer	
21	1001118084	1	Barrel	
21A	0961950	2	Bushing	
22	1001118086	1	Rod	
22A	0961950	2	Bushing	
100	1001139996	1	Kit, Seal (Includes Items 101-109)	
101	See Note	2	Ring, Wear (Note: Use p/n 1001139996)	
102	See Note	1	Ring, Back-Up (Note: Use p/n 1001139996)	
103	See Note	2	Ring, Lock (Note: Use p/n 1001139996)	
104	See Note	2	Ring, Back-Up (Note: Use p/n 1001139996)	
105	See Note	2	O-Ring (Note: Use p/n 1001139996)	
106	See Note	1	O-Ring (Note: Use p/n 1001139996)	
107	See Note	1	Seal (Note: Use p/n 1001139996)	
108	See Note	1	Wiper, Rod (Note: Use p/n 1001139996)	
109	See Note	2	Seal (Note: Use p/n 1001139996)	
200	1001119105	1	Kit, Sensor Magnet (Includes Items 201-203)	
201	See Note	NSS	Sleeve, Spacer (Note: Use p/n 1001119105)	
202	1001118066	1	Magnet, Sensor	
203	1001118069	1	Ring, Internal Retaining	

Manual # Model Designation PG#

1) MACHINE IDENTIFICATION

Machines are identified by model and in some cases a combination of models, serial number (SN) or redional standard (i.e ANSI, CE,CSA). Components may also be identified by SN or manufacturer. common components that may be identified by these characteristics are engines and hydraulic components.

2) PARTS MANUAL ORGANIZATION

Product informationin this manual is organized under section titles. Frame, Cylinder, Hydraulic and Electrical are a few examples. Each section is organized by figure and page number. The information within the Figure is then organized by item number, part number, description and corresponding illustration (s).

3) TABLE OF CONTENTS

A table of contents is found toward the beginning of the manual. Figure number, description and page number are provided for quick reference to the page containing the related information.

4) RECOMMENDED SPARE PARTS

The Recommended Spare Parts, located near the end of the manual, referance most frequently used maintenance parts.

5) PART NUMBER INDEX

A numerical index listing all part numbers and the corresponding page number(s) appears at the back of the manual.

GENERAL INFORMATION

6) NON-SERVICED PARTS
In sone instances, it is necessary to display non-serviced parts, assemblies or installations. In the case of assemblies and installations ther will be a Ref in the Qty column. In case of parts that are not available for service within assemblies or components, there will be a NSS (Not Sold Separately) or NLA (No Longer Available) listed in the Qty. column of the manual.

7) PARTS LIST ITEM NUMBERS
Numbers shown in the item# column correspond to numbers used in theassociated illustration (s). Item numbers which are mising from the sequence inthe parts list are not used on that page

8) INDENTED PARTS DESCRIPTION
An indented part description is included in the item under which it is indented.

9) ABB REVIATION AND SYMBOLS

AC ..... Alternating Current
ADE. ..... Advanced Design Electronics
ANSI ..... American National Standards Institute
AR.. ..... As Required
ASSY ..... Assembly
AUX... ..... Auxiliary
AWG ..... American Wire Gauge
B/M.. ..... Bill of Material
CE.. ..... European Conformity
CCW ..... Counter Clockwise
cm. ..... Centimeter
CW ..... Clockwise
CSA. ..... Canadian Standards Association
CYL... ..... Cylinder
DIA. ..... Diameter
DC ..... Direct Current
EMS ..... Emergency Stop
ENG ..... Engine
FT(ft).. ..... Feet
GA(Ga).. ..... Gauge
HYD ..... Hydraulic
Hz.. ..... Hertz
ID.. ..... Inside Diameter
in... ..... inches
ISO ..... International Organization for Standards
JIC ..... Joint Industry Council
KG ..... Kilogram
L.. ..... Liter
LB ..... Pounds
LCD ..... Liquid Crystal Display
LED ..... Light Emitting Diodes
LH... ..... Left Hand
LSS ..... Load Sensing System
M(m)... ..... Metric/Meter
MM (mm) ..... Milimeter
mA. ..... Miliamps
NLA..... No Longer Available
NPT ..... National Pipe Threads
NSS ..... Not Sold Separately
OD.. ..... Outside Diameter
ORB ..... O-Ring Boss
ORFS ..... O-Ring Face Seal
OZ (oz). ..... Ounces
PG ..... Page
P/N. ..... Part Number
qt. ..... Quarts
QTY. ..... Quantity
REF ..... Reference
REV ..... Revision Level
RH... ..... Right Hand
SAE..... Society of Automotive Engineers
SN.. ..... Serial Number
SPEC(S)..... Specifications
T/T. ..... Turntable
UGM ..... Universal Ground Module
V. ..... Volts
W... ..... Watts
#... ..... Number

10) ILLUSTRATION REFERANCE LETTERS
When necessary, illustrations may contain referance letters that are intended to track information (i. e. hoses, harnesses) from one point to another or to track visual enlargement of components to show details that may be located in another area on the illustration.

Note: Due to continuous product improvements, JLG Industries, Inc. reserves the right to make specification changes without prior notification. Contact JLG Industries, Inc. for updated information.

TABLE OF CONTENTS

SECTION 1 - FRAME 9

FIGURE 1-1. STEERING AND DRIVE INSTALLATION 10
FIGURE 1-2. WHEEL DRIVE ASSEMBLY 14
FIGURE 1-3. POTHOLE PROTECTION INSTALLATION 18
FIGURE 1-4. BATTERY CHARGER/BEACON LIGHT/INVERTER INSTALLATIONS 20
FIGURE 1-5. FRAME COVERS INSTALLATION 22

SECTION 2 - GROUND COMPONENTS 25

FIGURE 2-1. PUMP/MOTOR/TANK ASSEMBLY AND INSTALLATION 26
FIGURE 2-2. ELECTRICAL COMPONENTS INSTALLATION 30
FIGURE 2-3. GROUND CONTROL ASSEMBLY (MACHINES WITH 1600346 DRIVE MODULE) 34
FIGURE 2-4. GROUND CONTROL ASSEMBLY (MACHINES WITH 1001112456 DRIVE MODULE) 36
FIGURE 2-5. BATTERIES AND COVERS INSTALLATION 40

SECTION 3 - MAST 43

FIGURE 3-1. MAST INSTALLATION 44

SECTION 4 - PLATFORM 49

FIGURE 4-1. PLATFORM INSTALLATION 50
FIGURE 4-2. PLATFORM CONSOLE BOX INSTALLATION 54
FIGURE 4-3. DRIVE/STEER P/Q CONTROLLER ASSEMBLY 58
FIGURE 4-4. DRIVE/STEER J.R. MERRITT CONTROLLER ASSEMBLY 60

SECTION 5 - CYLINDER 63

FIGURE 5-1. LIFT CYLINDER ASSEMBLY 64
FIGURE 5-2. STEER CYLINDER ASSEMBLY 66

SECTION 6 - HYDRAULIC 69

FIGURE 6-1. HYDRAULIC DIAGRAM 70

SECTION 7 - ELECTRICAL 73

FIGURE 7-1. ELECTRICAL DIAGRAM LIST 74
FIGURE 7-2. ELECTRICAL CONNECTORS INSTALLATION (MACHINES WITH 1600346 DRIVE MODULE) 76
FIGURE 7-3. ELECTRICAL CONNECTORS INSTALLATION (MACHINES WITH 1001092456 DRIVE MODULE) 86

SECTION 8 - DECALS 97

FIGURE 8-1. DECAL INSTALLATION 98

SECTION 9 - RECOMMENDED SERVICE PARTS STOCK 103

FIGURE 9-1. MODEL 1230ES STANDARD PARTS 104
FIGURE 9-2. MODEL 1230ES VARIABLE PARTS 106
FIGURE 9-3. MODEL 1230ES MAINTENANCE KITS 108

SECTION 10 - SPECIAL OPTIONS 109

FIGURE 10-1. SPECIAL OPTIONS 110

PART NUMBER INDEX 113

SECTION 1 - FRAME

FIGURE 1-1. STEERING AND DRIVE INSTALLATION

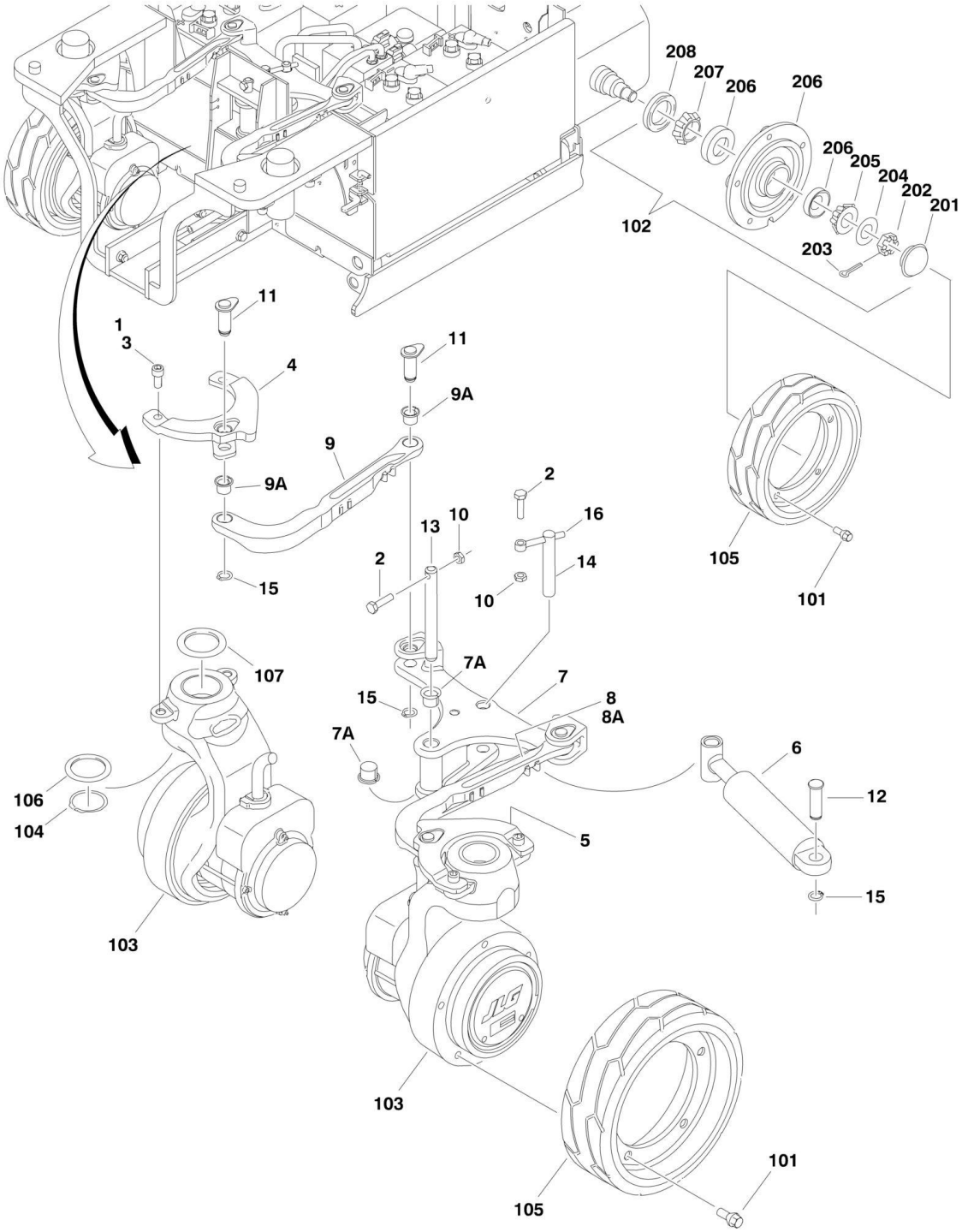

FIGURE 1-1. STEERING AND DRIVE INSTALLATION

ITEM	PART NUMBER	QTY	DESCRIPTION	REV
	0274549	Ref	**STEERING AND DRIVE INSTALLATION**	E
1	0100019	AR	Compound, Locking	
2	0761016	4	Bolt M10 x 40mm	
3	0630606	2	Capscrew M12 x 25mm	
4	0903594	1	Bracket, Steering Knuckle (Right)	
5	0903595	1	Bracket, Steering Knuckle (Left)	
6	1684458	1	Steer Cylinder Assembly (See CYLINDER SECTION for Breakdown)	
7	3010164	1	Link, Steering	
7A	0440263	2	Bushing, Flange	
8	3010165	1	Arm, Steering (Left)	
8A	0440263	2	Bushing, Flange	
9	3010166	1	Arm, Steering (Right)	
9A	0440263	2	Bushing, Flange	
10	3291005	2	Locknut M10	
11	3423303	4	Pin, Linkage	
12	3423230	1	Pin, Clevis	
13	3423235	1	Pin, Clevis	
14	3423236	1	Pin, Clevis	
15	3760348	5	Ring, Retaining	
16	3841143	1	Keeper	
		Ref	**DRIVE INSTALLATION**	
		Ref	**Note: For Module Identification, see note on Revision Log Page A before ordering parts.**	
	0274550	Ref	**Machines with 1600346 Drive Module**	I
	1001118433	Ref	**Machines with 1001092456346 Drive Module**	C
101	0630580	20	Bolt, Wheel	
102	2780266	2	Hub Assembly (See Items 201-208 for Breakdown)	
103		Ref	Wheel Drive Assembly Options (See WHEEL DRIVE ASSEMBLY for Breakdown):	
		Ref	**Note:Requires Identification Of Drive Module Before Ordering Parts. Refer To Revision Log Page A Of This Manual.**	
103	1001092743	2	USA Built Machines with 1600346 Drive Module	
103	1001118359	2	USA Built Machines with 1001092456 Drive Module	
103	3160329	NLA	French Built Machines with 1600346 Drive Module (Use p/n 1001092743) **(Prior to SN A200007624)**	
103	1001092743	2	French Built Machines with 1600346 Drive Module **(SN A200007624 through A200009897)**	
103	1001118359	2	China Built Machines	
104	3760463	2	Ring, Retaining	
105	4520565	4	Tire and Wheel Assembly (Use Kit p/n 2915012)	
105	1001100840	4	Tire and Wheel Assembly (Use Kit p/n 2915012)	
105	1001114467	4	Tire and Wheel Assembly (Use Kit p/n 2915012)	
105		Ref	Kit p/n 2915012 includes qty 1 Tire and wheel and qty 5 Wheel Bolts.	
		Ref	**Note: Must replace Tire & Wheel Assemblies in pairs per axle.**	
106	4740523	2	Washer	
107	4740524	2	Washer	
108	4240018	2	Tie-Strap (Not Shown)	
109	1321682	2	Clamp, Worm (Not Shown - Used on Drive Motor Cable)	

ITEM	PART NUMBER	QTY	DESCRIPTION	REV
110	4923602	1	Harness, Field Wire Connection (Not Shown - See ELECTRICAL SECTION for Breakdown) **(Prior to SN 0200225604, SN A20000000 to Present)**	
	2780266	Ref	**HUB ASSEMBLY**	E
		Ref	**Note: Quantities shown are for 1 assembly. Two Assemblies are required per machine.**	
201	1001102354	1	Cap, Dust (was p/n 7012524)	
202	3300423	1	Nut, Slotted (was p/n 7010641)	
203	3450406	1	Pin, Cotter 2in x 3/16in (was p/n 7010642)	
204	4740468	1	Washer (was p/n 7019697)	
205	1001102351	1	Bearing, Cone - Outer (was p/n 7026185)	
206	See Note	1	Hub (Note: Purchase Complete Hub p/n 2780266)	
207	1001102353	1	Bearing, Cone - Inner (was p/n 7026183)	
208	1001102349	1	Seal (was p/n 7026184)	

FIGURE 1-2. WHEEL DRIVE ASSEMBLY

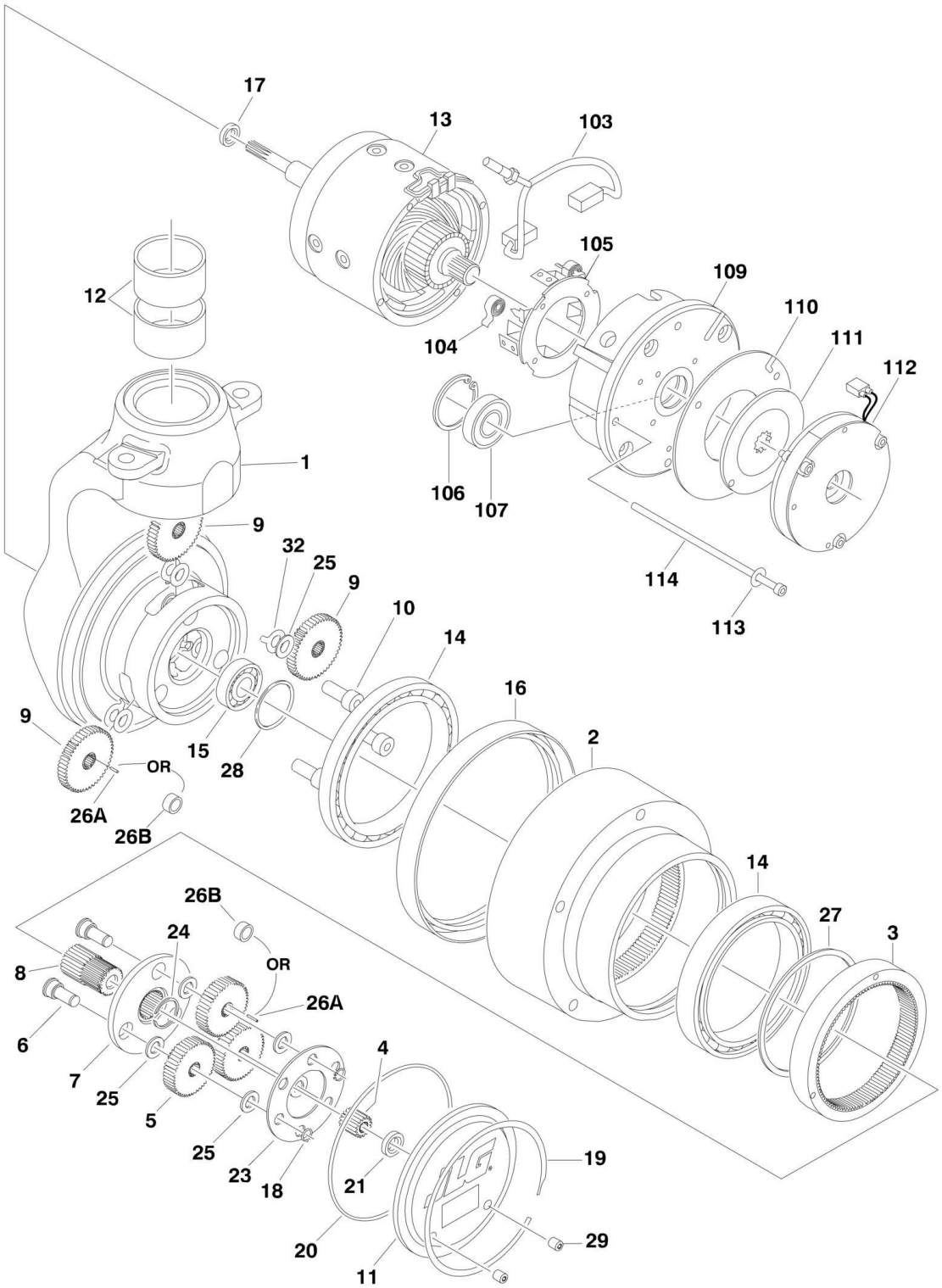

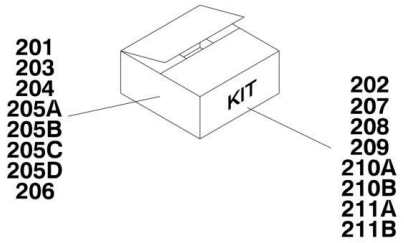
201
203
204
205A
205B
205C
205D
206
KIT
202
207
208
209
210A
210B
211A
211B

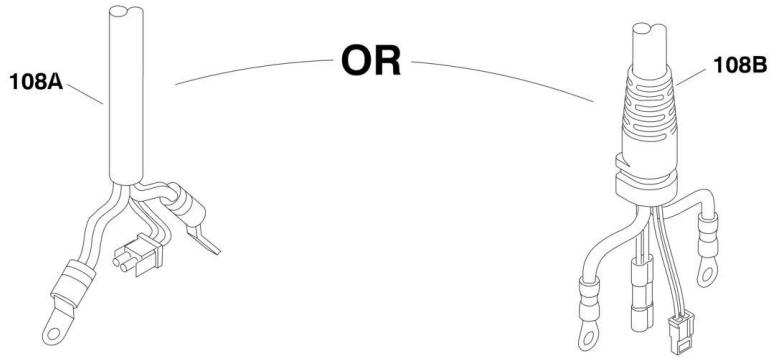
108A
OR
108B

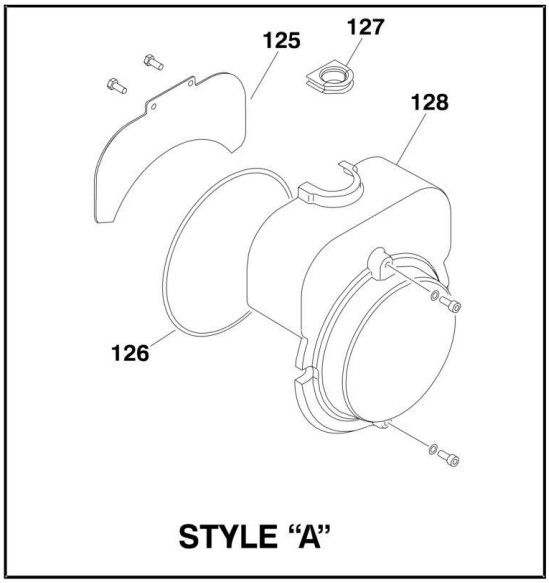
125
127
128
126
STYLE "A"

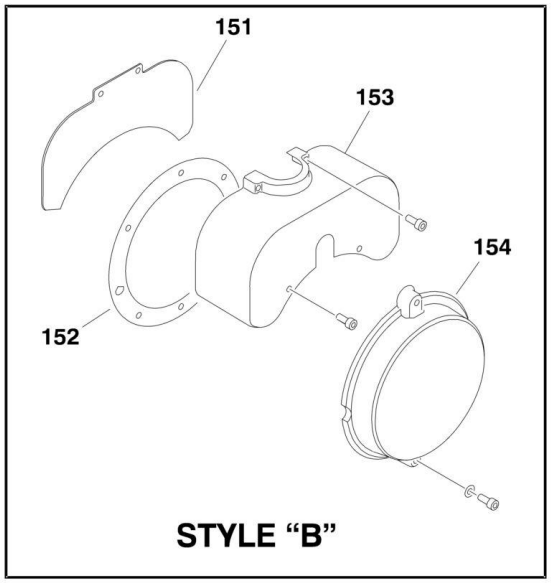
151
153
154
152
STYLE "B"

FIGURE 1-2. WHEEL DRIVE ASSEMBLY

ITEM	PART NUMBER	QTY	DESCRIPTION	REV
		Ref	**WHEEL DRIVE ASSEMBLY**	
		Ref	**Note: Due to service updates, drive motors may use any of the various parts listed below. Visual identification will be required.**	
		Ref	**Note: Requires identification of drive module before ordering parts. Refer to Revision Log Page of this manual.**	
	3160329	Ref	**French Built Machines with 1600346 Drive Module (Use p/n 1001092743 as replacement) (Prior to SN A200007624)**	D-F
	1001092743	Ref	**French Built Machines with 1600346 Drive Module (SN A200007624 through A200009897)**	D
	1001092743	Ref	**USA Built Machines with 1600346 Drive Module**	D
	1001118359	Ref	**USA Built Machines with 1001092456 Drive Module**	B
	1001118359	Ref	**China Built Machines with 1001092456 Drive Module**	A
		Ref	**HUB ASSEMBLY**	
1	See Note	NSS	Spindle (Note: Not Available - Purchase Complete Assembly)	
2	See Note	NSS	Hub (Note: Use Item 206)	
3	See Note	NSS	Ring, Input (Note: Use Item 204)	
4	See Note	NSS	Gear, Input Sun (Note: Use Item 203)	
5	See Note	NSS	Gear, Input Planet (Note: Use Item 203)	
6	See Note	NSS	Pin, Planet Gear (Note: Use Item 203)	
7	See Note	NSS	Carrier (Note: Use Item 203)	
8	See Note	NSS	Gear, Output Sun (Note: Use Item 203)	
9	See Note	NSS	Gear, Output Planet (Note: Use Item 207)	
10	See Note	NSS	Pin, Output Planet (Note: Use Item 207)	
11	See Note	NSS	Cover (Note: Use Item 201)	
12	7024757	1	Bushing Kit, Kingpin (Includes 2 Bushings)	
13	See Note	NSS	Motor, Electric (Note: Use Item 205A, 205B or 205C)	
14	See Note	NSS	Bearing, Main (Note: Use Item 202, 204, 206 or 207)	
15	See Note	NSS	Bearing, Shaft (Note: Use Item 207)	
16	70001739	1	Seal, Lip	
17	7024786	1	Seal, Lip	
18	See Note	NSS	Ring, Retaining (Note: Use item 203)	
19	See Note	NSS	Ring, Retaining (Note: Use Item 201)	
20	70000191	1	O-Ring	
21	See Note	NSS	Thrustwasher (Note: Use Item 201)	
23	See Note	NSS	Plate, Thrust (Note: Use Item 203)	
24	See Note	NSS	Ring, Retaining (Note: Use Item 203)	
25	See Note	9	Thrustwasher (Note: Use Item 203 or 207)	
26	See Note	NSS	Bearing/Bushing (Note: Use Item 203 or 207):	
26A	See Note	66	Bearing, Needle	
26B	See Note	6	Bushing	
27	See Note	NSS	Ring, Retaining (Note: Use Item 204, 206 or 207)	
28	See Note	NSS	Ring, Retaining (Note: Use Item 207)	
29	See Note	NSS	Plug (Note: Use Item 201)	
32	See Note	NSS	Washer, Tanged (Note: Use Item 207)	
		Ref	**BRAKE AND MOTOR COMPONENTS**	
103	See Note	NSS	Brush and Terminal Assembly (Note: Use Item 208)	
104	70000790	2	Spring, Brush	
105	70000791	1	Box, Brush	
106	See Note	NSS	Ring, Retaining (Note: Use Item 208)	
107	See Note	NSS	Bearing (Note: Use Item 208)	

ITEM	PART NUMBER	QTY	DESCRIPTION	REV
108		Ref	Harness, Electrical Cable Options:	
		Ref	**Note: Requires identification of drive module before ordering parts when equipped with item 108B style cable. Refer to Revision Log Page .**	
108A	7024770	NLA	Hub with Item 108A Style Cable (Use p/n 1001093652)	
108B	1001093652	1	Hub with Item 108B Style Cable & 1600346 Drive Module	
108B	1001118363	1	Hub with Item 108B Style Cable & 1001092456 Drive Module	
109	70000792	1	Commutator	
110	See Note	NSS	Disc, Reaction (Note: Use Item 209)	
111	7024785	1	Disc, Friction	
112	See Note	NSS	Brake Assembly (Note: Use Item 209)	
113	See Note	NSS	Flatwasher (Note: Use Item 210)	
114	See Note	NSS	Bolt (Note: Use Item 210)	
		Ref	**Style "A" Brake Cover**	
125	See Note	NSS	Plate, Cover (Note: Use Item 211A)	
126	See Note	NSS	O-Ring (Note: Use Item 210 or 211A)	
127	70000383	1	Connector, Strain Relief	
128	See Note	NSS	Cover (Note: Use item 211A)	
		Ref	**Style "B" Brake Cover**	
151	See Note	1	Plate, Cover (Note: Use Item 211B)	
152	70001949	1	Gasket, Cover	
153	See Note	1	Cover, Top (Note: Use Item 211B)	
154	See Note	1	Cover, End (Note: Use Item 211B)	
		Ref	**KIT OPTIONS**	
201	7024747	1	Cover Kit (Includes Items 11, 19, 20, 21 & 29)	
202	7024748	1	Main Seal Kit (Includes Qty 1 of Items 14, 16 & 20)	
203	7024749	1	Input Carrier Kit (Includes Items 4-8, 18, 20 & 23-26)	
204	7024758	1	Input Ring Kit (Includes Item 3, 20, 27 & Qty 1 of Item 14)	
205		Ref	Motor Kit Options (Includes Items 13, 17, 103-114 & 151-154):	
205A	3160329	1	French Built Machines (Use p/n 1001100819) **(Prior to SN A200007624)**	
205B		Ref	French Built Machines Options: **(SN A200007624 through A200009897)**	
205B	70001347	1	Wheel Drive Assembly 1001092743	
205B	70002308	1	Wheel Drive Assembly 1001118359	
205C		Ref	USA Built Machines Options:	
205C	70001347	1	Wheel Drive Assembly 1001092743	
205C	70002308	1	Wheel Drive Assembly 1001118359	
206	7024756	1	Hub Kit (Includes Items 2,16,20,27 & Qty 1 of Item 14)	
207	7024750	1	Output Planet Kit (Includes Items 9, 10, 15, 20, 25-28, 32 & Qty 1 of Item 14)	
208	7024771	1	Motor Brush and Bearing Kit (Includes Items 103, 106 & 107)	
209	7024772	1	Brake Kit (Includes Items 110, 111 & 112)	
210	7024773	1	Motor Hardware Kit (Includes 113, 114 & 126)	
211		Ref	Brake Cover Kit Options:	
211A	7024787	1	Style "A" (Includes Items 125 - 128)	
211B	70001265	1	Style "B" (Includes Items 151 - 154)	

FIGURE 1-3. POTHOLE PROTECTION INSTALLATION

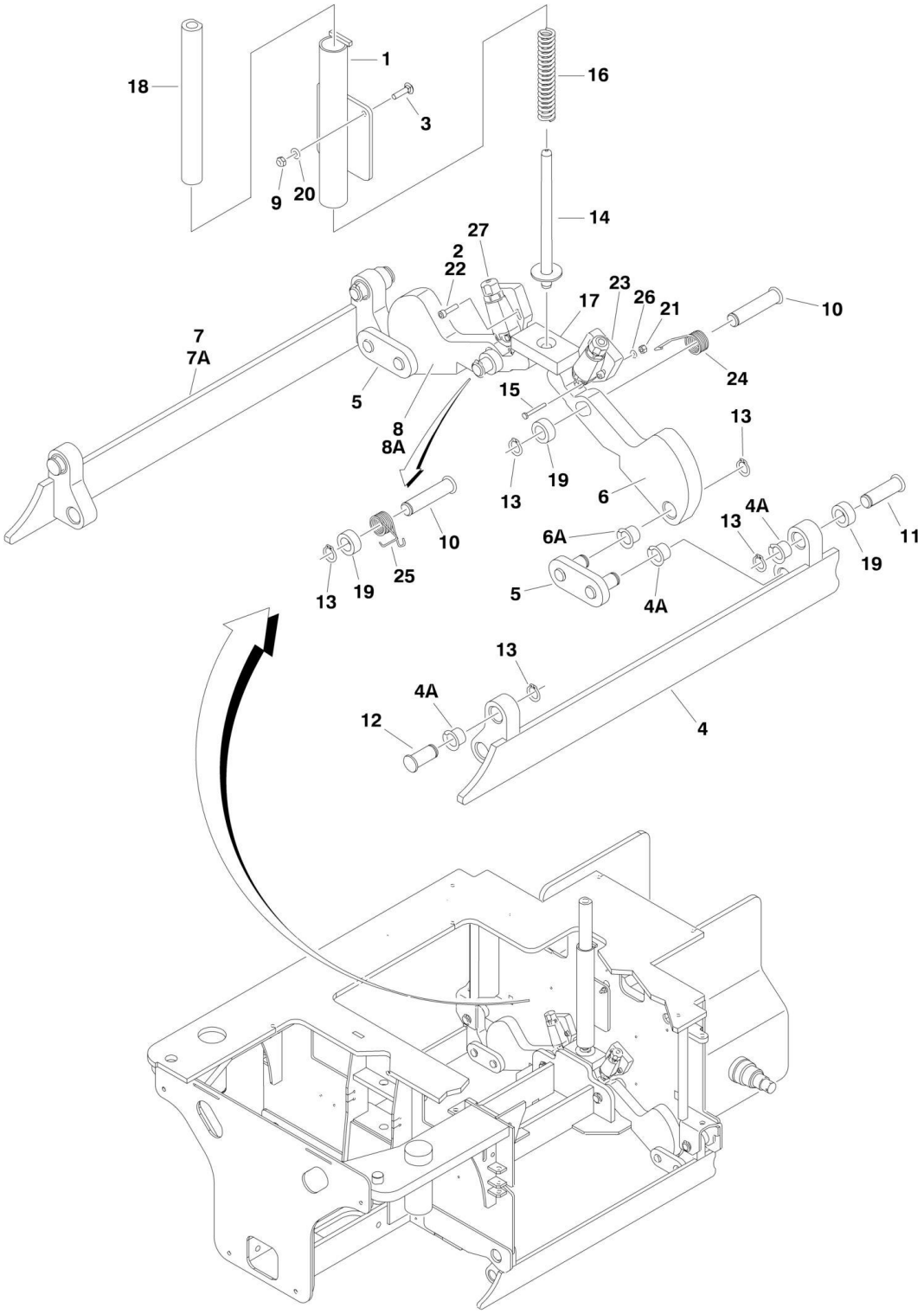

FIGURE 1-3. POTHOLE PROTECTION INSTALLATION

ITEM	PART NUMBER	QTY	DESCRIPTION	REV
	0274564	Ref	**POTHOLE PROTECTION INSTALLATION**	I
1	0060084	1	Actuator	
2	0100035	AR	Compound, Locking	
3	0630587	2	Bolt, Carriage M6 x 25mm	
4	3010145	1	Bar, Pothole (Left)	
4A	0440263	2	Bushing, Flange	
5	3010146	2	Link	
6	3010147	2	Link, Actuator (Left)	
6A	0440263	1	Bushing, Flange	
7	3010152	1	Bar, Pothole (Right)	
7A	0440263	2	Bushing, Flange	
8	3010153	2	Link, Actuator (Right)	
8A	0440263	1	Bushing, Flange	
9	3290605	2	Locknut M6	
10	3423189	2	Pin	
11	3423230	2	Pin	
12	3423231	2	Pin	
13	3760348	10	Ring, Retaining	
14	3841703	1	Rod, Actuator	
15	4010415	4	Screw M4 x 35mm	
16	4160160	1	Spring	
17	4220258	1	Pad, Actuator	
18	4569225	1	Tube, Actuator	
19	4569238	4	Spacer	
20	4811700	2	Flatwasher M6	
21	3290405	4	Locknut M4	
22	4031709	4	Capscrew M6 x 25mm	
23	4220308	2	Spacer	
24	4160222	1	Spring (Right)	
25	4160223	1	Spring (Left)	
26	4811400	2	Flatwasher M4	
27		Ref	Switch, Limit Options:	
		Ref	**Note: Requires identification of drive module before ordering parts. Refer to Revision Log Page A of this manual.**	
27	4360633	NLA	Switch for Machines with 1600346 Drive Module(USA Built Machines) (Use p/n 1001115448) **(Prior to SN 0200195926)**	
27	1001109088	2	Switch for Machines with 1600346 Drive Module (USA Built Machines) **(SN 0200195926 to Present)**	
27	4360633	2	Switch for Machines with 1600346 Drive Module (French Built Machines) (Use p/n 1001115448)	
27	1001109088	2	Switch for Machines with 1001092456 Drive Module	

FIGURE 1-4. BATTERY CHARGER/BEACON LIGHT/INVERTER INSTALLATIONS

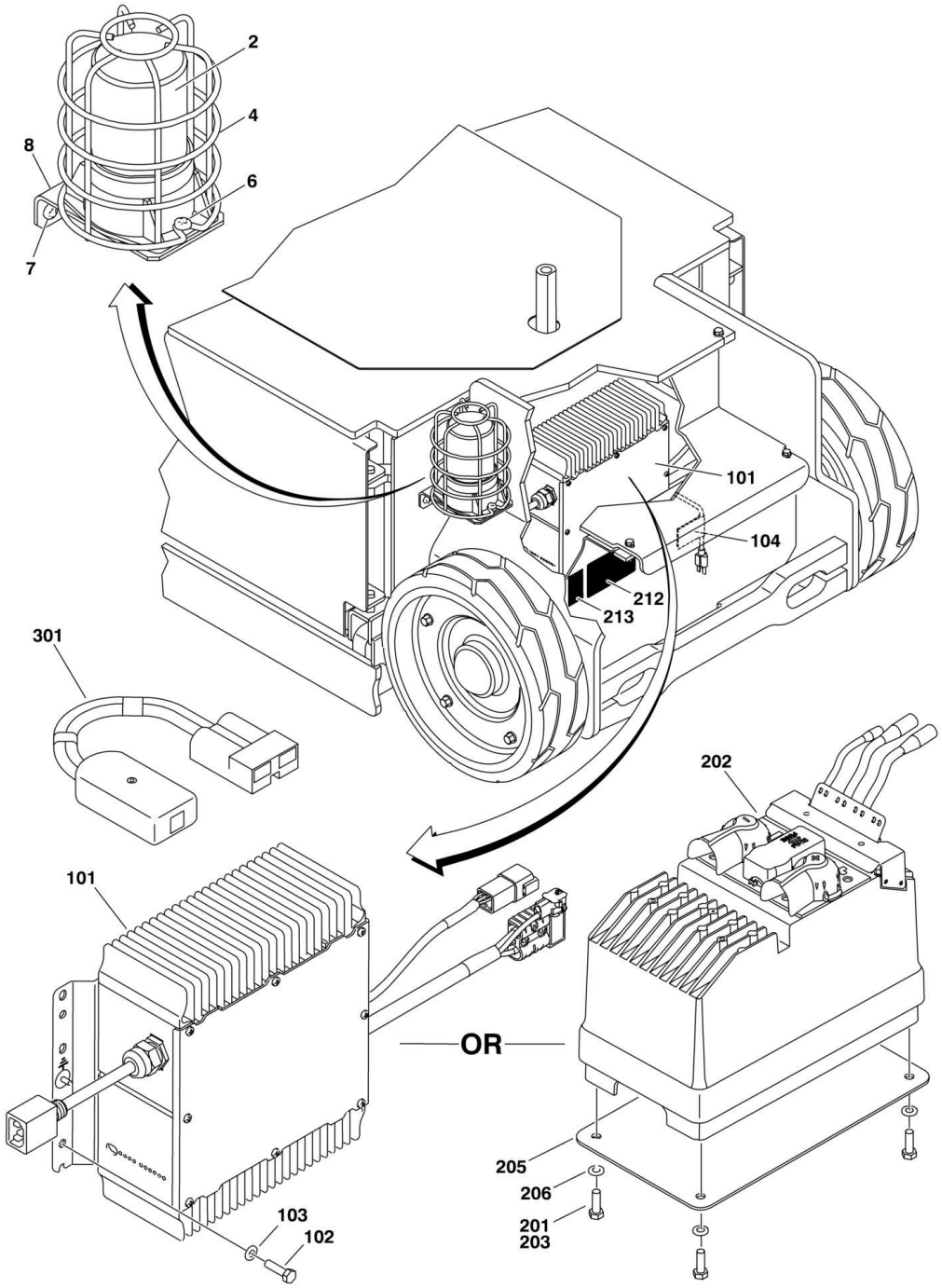

FIGURE 1-4. BATTERY CHARGER/BEACON LIGHT/INVERTER INSTALLATIONS

ITEM	PART NUMBER	QTY	DESCRIPTION	REV
	0274558	Ref	**BEACON LIGHT INSTALLATION (OPTIONAL)**	E
2	2920161	1	Light, Beacon	
2	7016319	1	Bulb, Replacement	
2	7016372	1	Len, Replacement	
4	4060865	1	Guard, Strobe	
6	4191406	2	Screw M4 x 12mm	
7	4191706	2	Screw M6 x 12mm	
8	4341144	1	Mount, Beacon	
	0274562	Ref	**BATTERY CHARGER INSTALLATION**	D
101		Ref	Battery Charger Assembly	
		Ref	**Note: Cable ends are the only serviceable parts. See ELECTRICAL SECTION for call-outs.**	
101	0400238	NLA	USA Built Machines (Use Kit p/n 1001128737 includes Charger and Battery Temperature Sensor Kit) **(Prior to SN 0200197381)**	
101	1001112111	1	USA Built Machines **(SN 0200197381 to Present)**	
101	0400238	1	French Built Machines (Use Kit p/n 1001128737 includes Charger and Battery Temperature Sensor Kit)	
101	1001112111	1	China Built Machines	
102	4191706	2	Screw M6 x 12mm	
103	4811700	2	Flatwasher M6	
104	1001103743	1	Decal - Charger	
	0274563	Ref	**BATTERY CHARGER/INVERTER COMBINATION INSTALLATION (ANSI AND CSA SPECS OPTION)**	E
201	0100011	AR	Compound, Locking	
202	0400237	1	Battery Charger/Inverter Assembly (Use p/n 1001093839)	
203	0760812	4	Screw M8 x 25mm	
205	2820239	1	Pad, Insulator	
206	4740562	4	Flatwasher	
212	1706749	1	Decal - Inverter	
213	1706750	1	Decal - On/Off Inverter	
214	1706765	1	Decal - Hazardous Voltage (Not Shown - Located on Mast Cover Near AC Receptacle)	
301	2915230	1	**BATTERY CHARGER REPROGRAM CONTROLLER KIT FOR DELTA-Q CHARGER ONLY**	

FIGURE 1-5. FRAME COVERS INSTALLATION

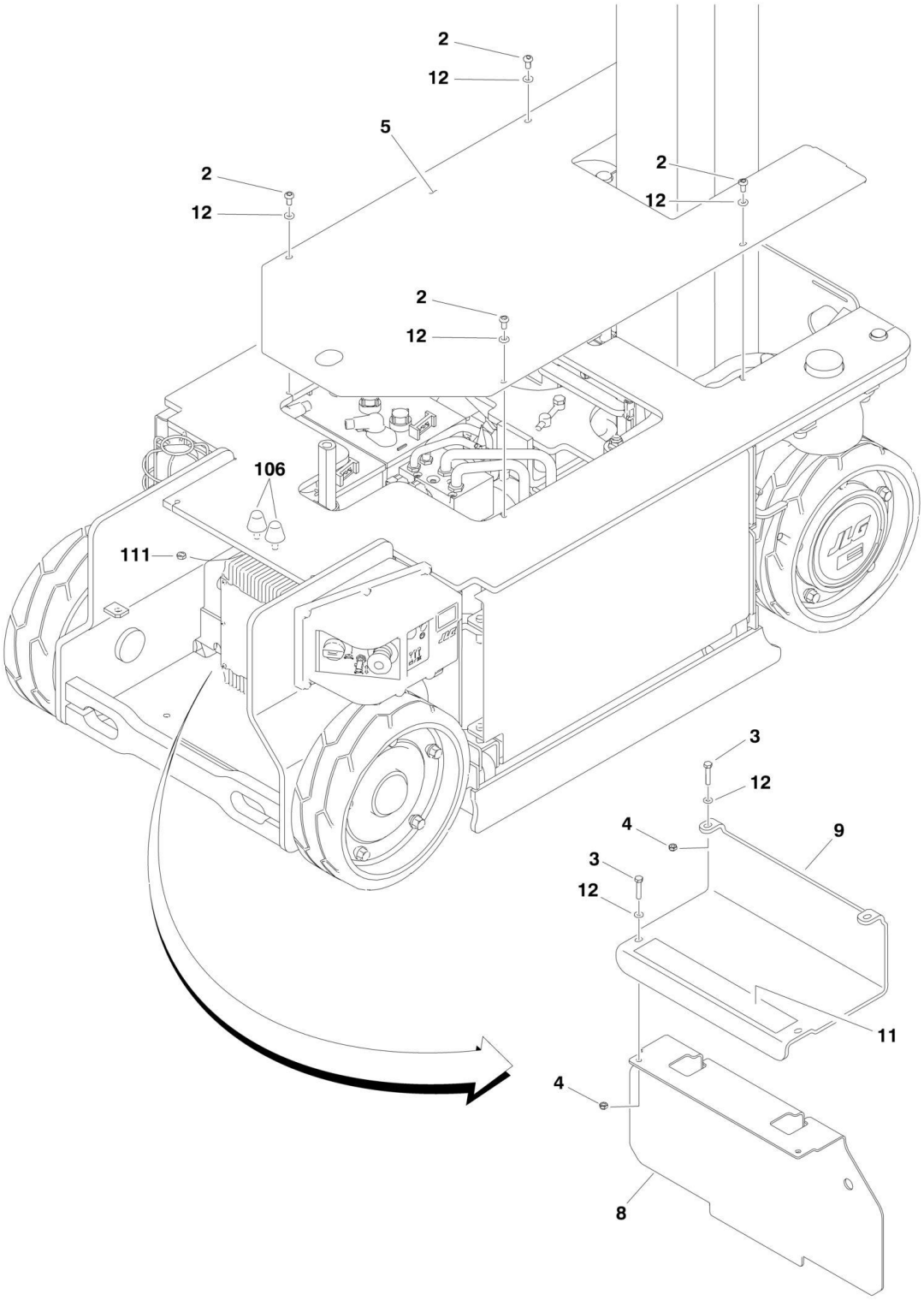

FIGURE 1-5. FRAME COVERS INSTALLATION

ITEM	PART NUMBER	QTY	DESCRIPTION	REV
	0274560	Ref	**FRAME COVERS INSTALLATION**	I
2	4191708	4	Bolt M6 x 20mm	
3	0760614	4	Bolt M6 x 30mm	
4	3290605	4	Locknut M6	
5	3380604	1	Panel, Top Cover	
8	3380619	1	Cover, Charger	
9	3575919	1	Plate, Step	
11	4420070	1	Tape, Anti-Skid	
12	4811700	AR	Flatwasher 6mm	
		Ref	**PLATFORM BUMPER INSTALLATION**	
	1001098653	Ref	**All Specs Except Australian and CE Specs (USA Built Machines) (Prior to SN 0200196530)**	G
	1001098653	Ref	**All Specs Except Australian and CE Specs (French Built Machines)**	G
	0274552	Ref	**All Specs Except Australian and CE Specs (USA Built Machines) (SN 0200196530 to Present)**	R
	0274552	Ref	**All Specs Except Australian and CE Specs (All China Built Machines)**	R
	1001100633	Ref	**Australian Specs**	D
	0274552	Ref	**CE Specs**	R
106	0940088	2	Bumper (Use p/n 1001008575)	
		Ref	**Note: Recommend purchasing item 111 Nut when replacing Bumper.**	
111	3290805	2	Nut M8	

SECTION 2 - GROUND COMPONENTS

FIGURE 2-1. PUMP/MOTOR/TANK ASSEMBLY AND INSTALLATION

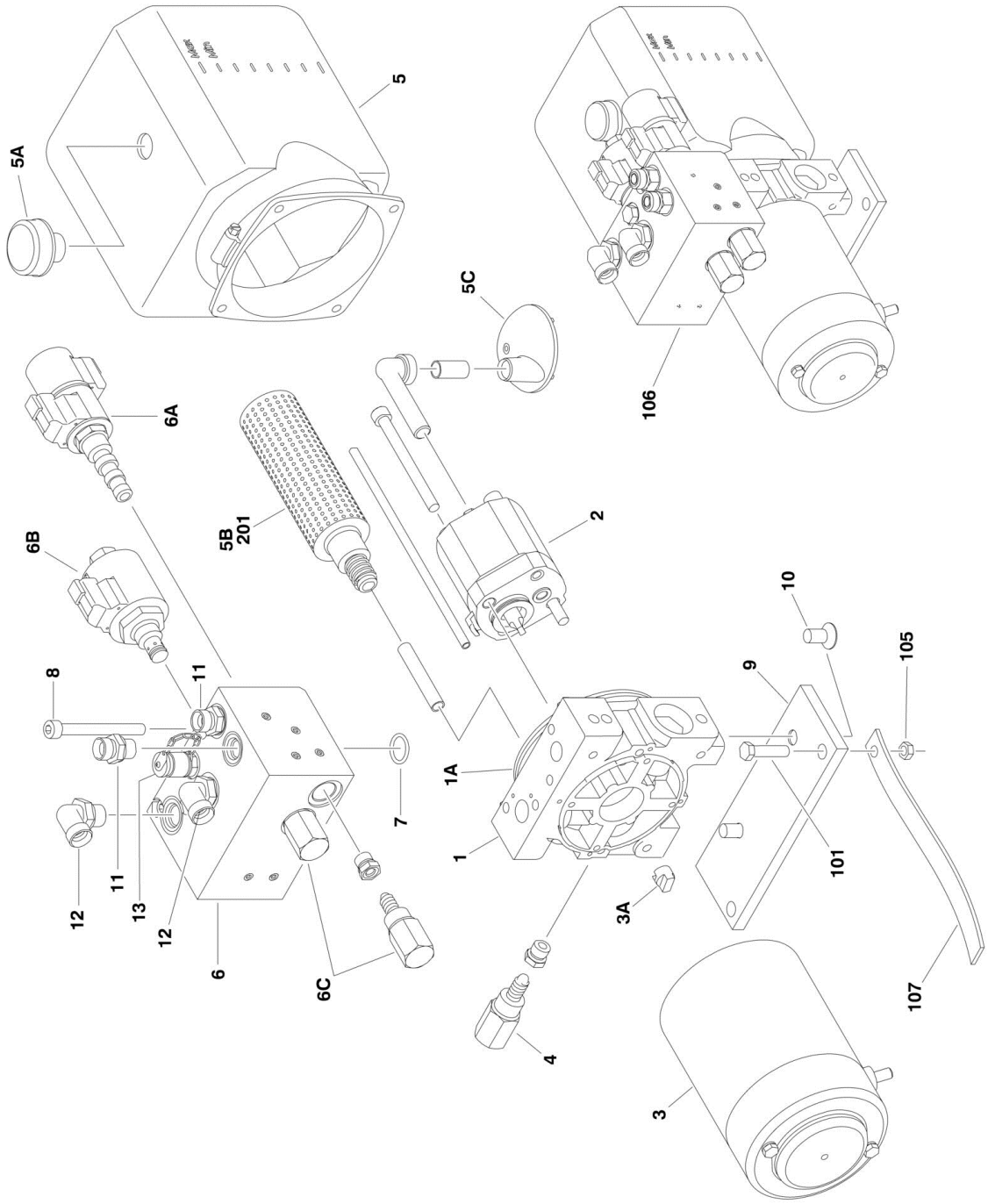

FIGURE 2-1. PUMP/MOTOR/TANK ASSEMBLY AND INSTALLATION

ITEM	PART NUMBER	QTY	DESCRIPTION	REV
		Ref	**PUMP/MOTOR/TANK ASSEMBLY**	
	3600432	Ref	**French Built Machines (Original Equipment) (Prior to SN A200009318)**	I
	1001101832	Ref	**French Built Machines (Service Replacement) (Prior to SN A200009318)**	A
	1001101831	Ref	**French Built Machines (SN A200009318 through A200009897)**	C
	3600432	Ref	**USA Built Machines (Original Equipment) (Prior to SN 0200189255)**	I
	1001101832	Ref	**USA Built Machines (Service Replacement) (Prior to SN 0200189255)**	A
	1001101831	Ref	**USA Built Machines (SN 0200189255 to Present)**	C
	1001101831	Ref	**China Built Machines (SN B20000100 to Present)**	C
		Ref	**NOTE: ORIGINAL EQUIPMENT ASSEMBLY P/N 3600432 MAY HAVE BEEN REPLACED WITH SERVICE REPLACEMENT ASSEMBLY P/N 1001101832. IDENTIFY P/N BEFORE ORDERING REPLACEMENT COMPONENTS.**	
		Ref	**NOTE: THE PARTS LIST BELOW (#1-13) IS FOR P/N 3600432 PUMP/MOTOR/TANK ASSEMBLY. NO SERVICE PARTS ARE AVAILABLE FOR THE 1001101831 & 1001101832 PUMP/MOTOR/TANK ASSEMBLIES.**	
1	See Note	NSS	Adapter Assembly (Note: Not Available - Purchase Complete Assembly)	
1A	7011025	1	O-Ring	
2	70000661	1	Pump Assembly	
2	See Note	NLA	Seal Kit (Note: Use p/n 70000661)	
3	70000662	1	Motor Assembly	
3	70000663	1	Brush Kit	
3	70000664	2	Bearing, Ball	
3A	70000665	1	Coupling	
4	70000666	1	Cartridge, Relief	
4	See Note	NLA	Seal Kit (Note: Use p/n 70000666)	
5	70000667	1	Tank Assembly	
5A	70000668	1	Breather	
5B	70000669	1	Filter	
5C	70000670	1	Filter, Suction	
6	See Note	NSS	Valve Assembly (Note: Not Available - Purchase Complete Assembly)	
6A	70000671	1	Cartridge, Solenoid	
6A	See Note	NLA	Seal Kit (Note: Use p/n 70000671)	
6A	See Note	NSS	Coil (Note: Use p/n 70000671)	
6B	70000672	1	Cartridge, Solenoid	
6B	See Note	NLA	Seal Kit (Note: Use p/n 70000672)	
6B	See Note	NSS	Coil, (Note: Use p/n 70000672)	
6C	70000666	2	Cartridge, Relief	
6C	See Note	NLA	Seal Kit (Note: Use p/n 70000666)	
7	70000673	2	O-Ring	
8	70000674	3	Screw	
9	70000675	1	Bracket, Mounting	
10	70000676	2	Screw	
11	2144605	2	Fitting, Straight	
12		Ref	Fitting Options:	
12	2144610	2	Straight Fitting	

ITEM	PART NUMBER	QTY	DESCRIPTION	REV
12	1001101362	2	90, Fitting	
13	2221086	1	Fitting, Pressure Check	
	0274581	Ref	**PUMP/MOTOR/TANK INSTALLATION**	G
101	0761016	2	Bolt M10 x 40mm	
105	3291005	2	Locknut M10	
106		Ref	Pump/Motor/Tank Assembly Options (See Items 1-13 for Breakdown):	
106	3600432	NLA	French Built Machines (Use p/n 1001101832) **(Prior to SN A200009318)**	
106	1001101831	1	French Built Machines **(SN A200009318 through A200009897)**	
106	3600432	NLA	USA Built Machines (Use p/n 1001101832) **(Prior to SN 0200189255)**	
106	1001101831	1	USA Built Machines **(SN 02001892558 to Present)**	
106	1001101831	1	China Built Machines **(SN 020000100 to Present)**	
107	4240147	1	Strap, Anti-Static	
		Ref	**KIT OPTIONS**	
201		Ref	Maintenance Kit Options (Includes Item 5B & 1 Gallon of Hydraulic Oil):	
201	1001101328	1	3600432 Assembly	
201	Not Available		1001101831 & 1001101832 Assemblies	

FIGURE 2-2. ELECTRICAL COMPONENTS INSTALLATION

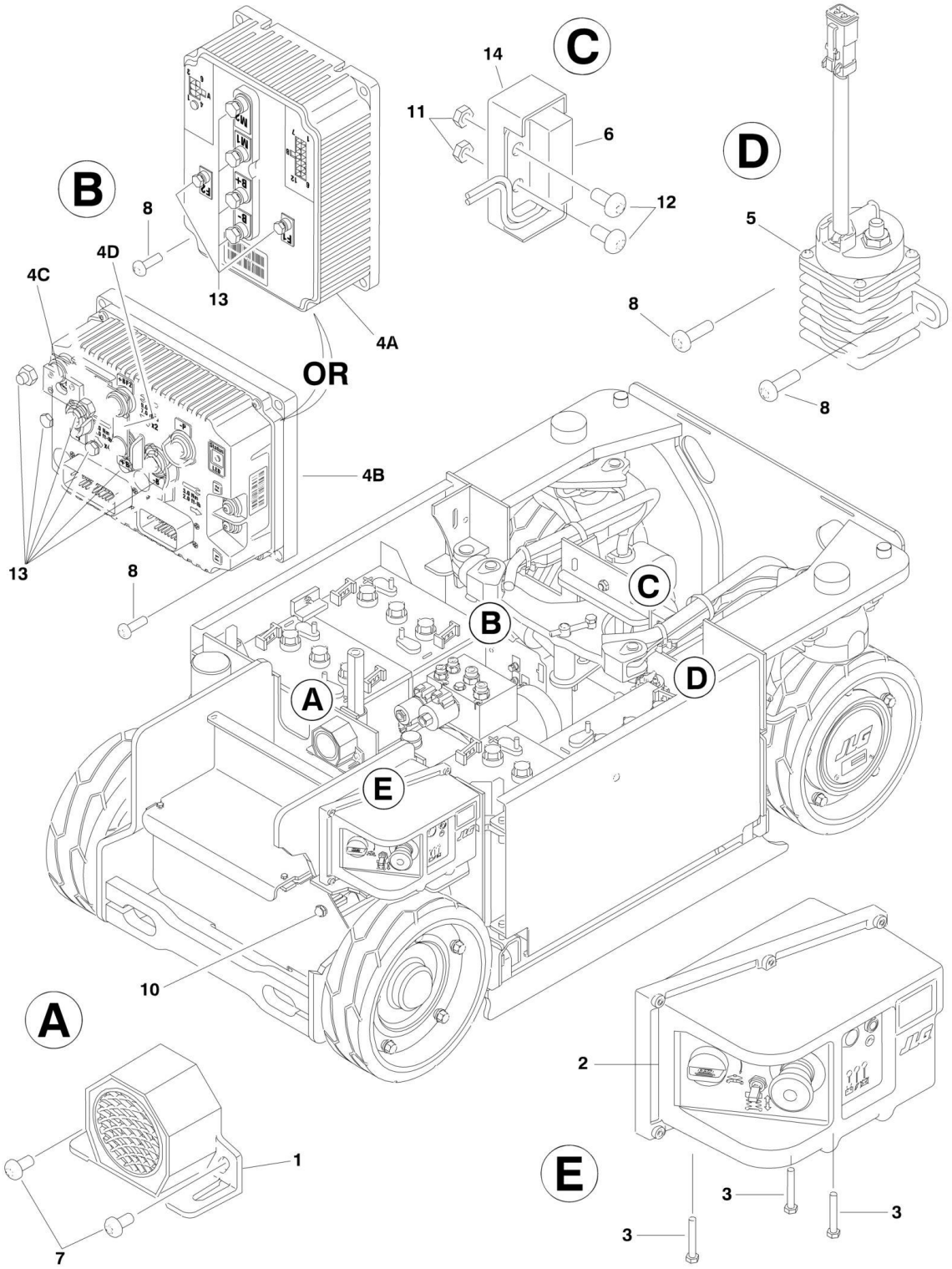

FIGURE 2-2. ELECTRICAL COMPONENTS INSTALLATION

ITEM	PART NUMBER	QTY	DESCRIPTION	REV
		Ref	**ELECTRICAL COMPONENTS INSTALLATION**	
	0274555	Ref	**ANSI and ANSI Export Specs with p/n 1600346 Drive Modules**	I
	1001116638	Ref	**ANSI and ANSI Export Specs with p/n 1001116638 Drive Modules (Prior to SN 0200233359)**	B
	1001166824	Ref	**ANSI and ANSI Export Specs with p/n 1001116638 Drive Modules (SN 0200233359 to Present)**	B
	0274778	Ref	**Australian Specs with p/n 1600346 Drive Modules**	I
	1001116639	Ref	**Australian Specs with p/n 1001116638 Drive Modules (Prior to SN 0200203535)**	B
	1001116638	Ref	**Australian Specs with p/n 1001116638 Drive Modules (SN 0200203535 through 0200233359)**	B
	1001166824	Ref	**Australian Specs with p/n 1001116638 Drive Modules (SN 0200238468 to Present)**	B
	0274778	Ref	**CE Specs with p/n 1600346 Drive Modules**	I
	1001116639	Ref	**CE Specs with p/n 1001116638 Drive Modules (Prior to SN 0200238468)**	B
	1001166827	Ref	**CE Specs with p/n 1001116638 Drive Modules (SN 0200238468 to Present)**	B
1	0140043	1	Alarm	
2		Ref	**Ground Control Box Assembly Options:**	
2		Ref	**Note: For Module Identification, see note on Revision Log Page before ordering parts.**	
2		Ref	**Note: All French Built Machines Use the 1600346 Module.**	
2		Ref	**Note: All China Built Machines Use the 1001092456 Module.**	
2	0272780	1	Box Assembly - ANSI & ANSI Export Specs with 1600346 Drive Modules (See GROUND CONTROL ASSEMBLY (MACHINES WITH 1600346 DRIVE MODULE)`for Breakdown.	
2	1001114929	NLA	Box Assembly - ANSI & ANSI Export Specs with p/n 1001092456 Drive Module (Use p/n 1001166194 for replacement of complete box assembly) (See GROUND CONTROL ASSEMBLY (MACHINES WITH 1001112456 DRIVE MODULE) for Breakdown) **(Prior to SN 0200233359)**	
2	1001166194	1	Box Assembly - ANSI & ANSI Export Specs with p/n 1001092456 Drive Module (See GROUND CONTROL ASSEMBLY (MACHINES WITH 1001112456 DRIVE MODULE) for Breakdown) **(SN 0200233359 to Present)**	
2	0273444	1	Box Assembly - Australian Specs with p/n 1600346 Drive Module (See GROUND CONTROL ASSEMBLY (MACHINES WITH 1600346 DRIVE MODULE) for Breakdown)	
2	1001114931	NLA	Box Assembly - Australian Specs with p/n 1001092456 Drive Module (Use p/n 1001166196 for replacement of complete box assembly) (See GROUND CONTROL ASSEMBLY (MACHINES WITH 1001112456 DRIVE MODULE) for Breakdown) **(Prior to SN 0200203535)**	
2	1001114929	NLA	Box Assembly - Australian Specs with p/n 1001092456 Drive Module (Use p/n 1001166194 for replacement of complete box assembly) (See GROUND CONTROL ASSEMBLY (MACHINES WITH 1001112456 DRIVE MODULE) for Breakdown) **(SN 0200203535 through 0200233359)**	
2	1001166194	1	Box Assembly - Australian Specs with p/n 1001092456 Drive Modules (See GROUND CONTROL ASSEMBLY (MACHINES WITH 1001112456 DRIVE MODULE) for Breakdown) **(SN 0200233359 to Present)**	
2	0273444	1	Box Assembly - CE Specs with1600346 Drive Module (See GROUND CONTROL ASSEMBLY (MACHINES WITH 1600346 DRIVE MODULE) for Breakdown)	
2	1001114931	NLA	Box Assembly - CE Specs with 1001092456 Drive Module (Use	

ITEM	PART NUMBER	QTY	DESCRIPTION	REV
			p/n 1001166194 for replacement of complete assembly (See GROUND CONTROL ASSEMBLY (MACHINES WITH 1001112456 DRIVE MODULE) for Breakdown) **(Prior to SN 0200238468)**	
2	1001166196	1	Box Assembly - CE Specs with 1001092456 Drive Modules (See GROUND CONTROL ASSEMBLY (MACHINES WITH 1001112456 DRIVE MODULE) for Breakdown) **(SN 0200238468 to Present)**	
3	0700615	3	Bolt M6 x 35mm	
4		Ref	Module, Drive Options:	
		Ref	**Note: For Module Identification, see note on Revision Log Page before ordering parts.**	
4A	1600346	1	Module - Identify by visual inspection or by p/n on Label	
4B	1001092456	1	Module - Identify by visual inspection or by p/n on Label	
4B		Ref	1001092456 Replacement Components:	
4C	70002683	1	Fuse	
4D	70002682	1	Bussbar	
5	3740150	1	Relay	
6	4000010	1	Sensor, Proximity	
7	4191706	2	Screw M6 x 12mm	
8	4191708	5	Screw M6 x 20mm	
9		Ref	Harness, Chassis (See ELECTRICAL SECTION for Breakdown) (Not Shown)	
		Ref	**Note: Requires identification of drive module before ordering parts. Refer to Revision Log Page of this manual.**	
9	4923301	1	Harness for Machines with 1600346 Drive Module (USA Built Machines) **(Prior to SN 0200195926)**	
9	1001110303	1	Harness for Machines with 1600346 Drive Module (USA Built Machines) **(SN 0200195926 to Present)**	
9	4923301	1	Harness for French Built Machines with 1600346 Drive Module	
9	1001116640	1	Harness for USA/China Built Machines with 1001092456 Drive Module	
10	4360387	1	Switch, Push Button	
11	3290605	2	Locknut M6	
12	3900392	2	Screw M6 x 30mm	
13	0100048	AR	Grease, Dielectric	
14	4220307	1	Block, Spacer	
15	4240153	1	Strap, Clinch (Not Shown)	

FIGURE 2-3. GROUND CONTROL ASSEMBLY (MACHINES WITH 1600346 DRIVE MODULE)

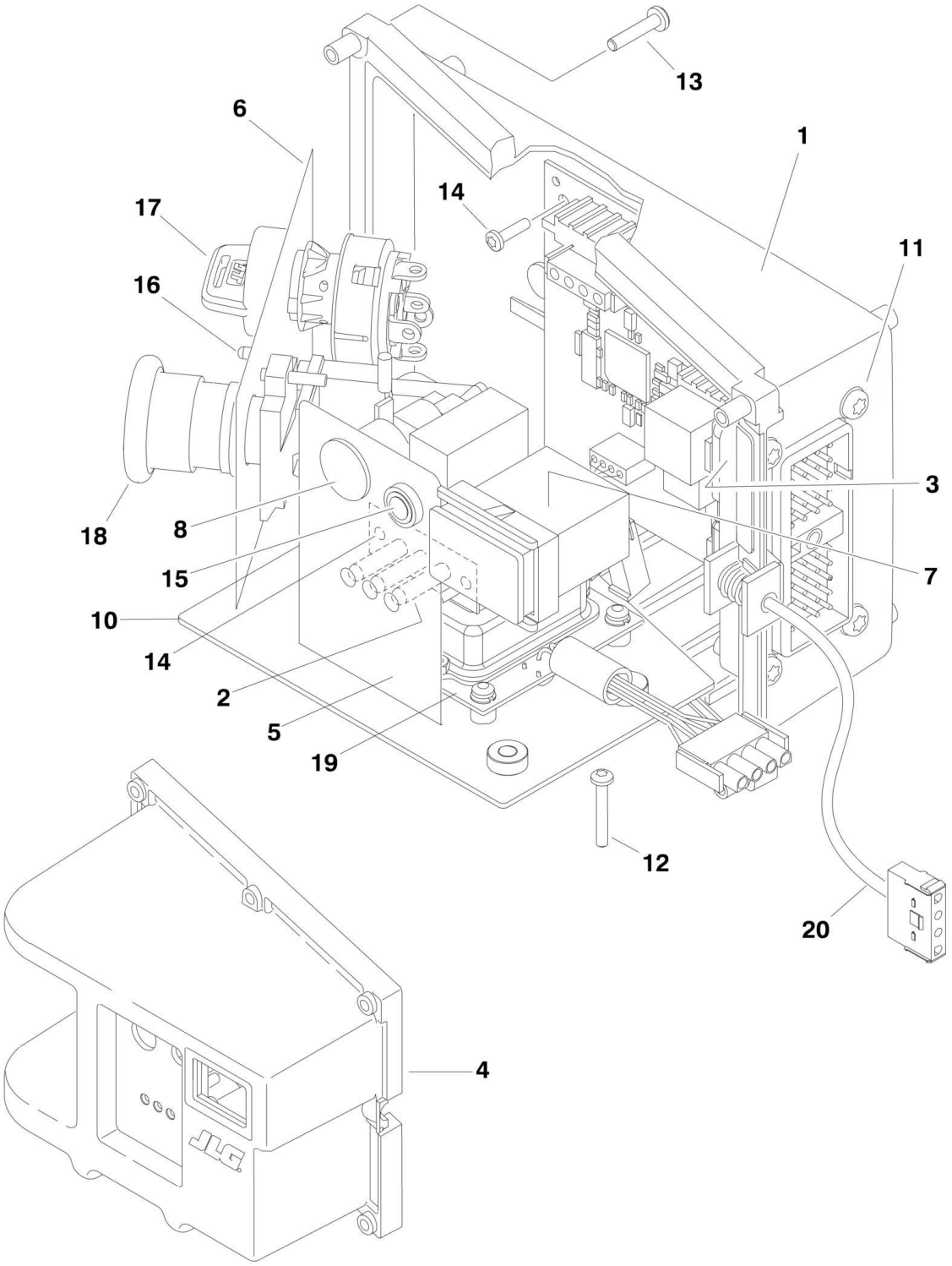

FIGURE 2-3. GROUND CONTROL ASSEMBLY (MACHINES WITH 1600346 DRIVE MODULE)

ITEM	PART NUMBER	QTY	DESCRIPTION	REV
		Ref	**Note: For Module Identification, see note on Revision Log Page before ordering parts.**	
		Ref	**Note: All french Built Machines use the 1600346 Module.**	
		Ref	**Note: All China Built Machines use the 1001092456 Module.**	
		Ref	**GROUND CONTROL ASSEMBLY WITH P/N 1600346 DRIVE MODULES**	
	0272780	Ref	**Ground Control Assembly - ANSI and ANSI Export Specs**	AB
	0273444	Ref	**Ground Control Assembly - AUSTRALIAN and CE Specs**	X
1	0380025	1	Box, Ground Control	
2	0610161	1	Board, PC (Battery Charger LED)	
3	1600419	1	Board, PC (Ground Control)	
3	2915039	1	Upgrade Kit (Includes Cables, Programming Instructions and CD Software)	
3		Ref	**Note: PC Board must be recalibrated when replaced.**	
4	1671105	1	Cover, Front	
5		Ref	Decal - LED Options:	
5	1705696	1	ANSI and ANSI Export Specs	
5	1705697	1	CE and Australian Specs	
6	1705698	1	Decal - Function	
7	2420172	1	Hourmeter	
8	3520193	1	Plug	
10	4340739	1	Plate, Mounting	
11	3900336	4	Screw, Torx #10-32NC x 1/2in	
12	3900356	4	Screw, Torx M3.5 x 16mm	
13	3900338	6	Screw, Torx M4 x 20mm	
14	3900339	5	Screw, Plastite #6 x 1/2in	
15	4360069	1	Breaker, Circuit - 10 Amp	
16	4360328	1	Switch, Toggle	
17		Ref	Keyswitch Options:	
17	4360469	1	ANSI and ANSI Export Specs	
17	4360470	1	Australian Specs (USA Built Machines) **(Prior to SN 0200203535)**	
17	4360470	1	Australian Specs (All French Built Machines)	
17	4360469	1	Australian Specs (USA Built Machines) **(SN 0200203535 to Present)**	
17	4360469	1	Australian Specs (All China Built Machines)	
17	4360470	1	CE Specs	
17	2860030	1	Key, Replacement (Fits All Specs)	
18	4360475	1	Switch, Emergency Stop	
18	7020175	1	Cap	
18	7020176	1	Block, Contact	
19		Ref	Module, Tilt Options:	
19	4000006	NLA	Tilt Module (Use p/n 1810140)	
20	4922865	1	Harness, Control Box (See ELECTRICAL SECTION for Breakdown)	
	0274791	Ref	**ANTI-VANDELISM PACKAGE INSTALLATION (NOT SHOWN)**	A
	1671124	1	Cover, Ground Control Box	

FIGURE 2-4. GROUND CONTROL ASSEMBLY (MACHINES WITH 1001112456 DRIVE MODULE)

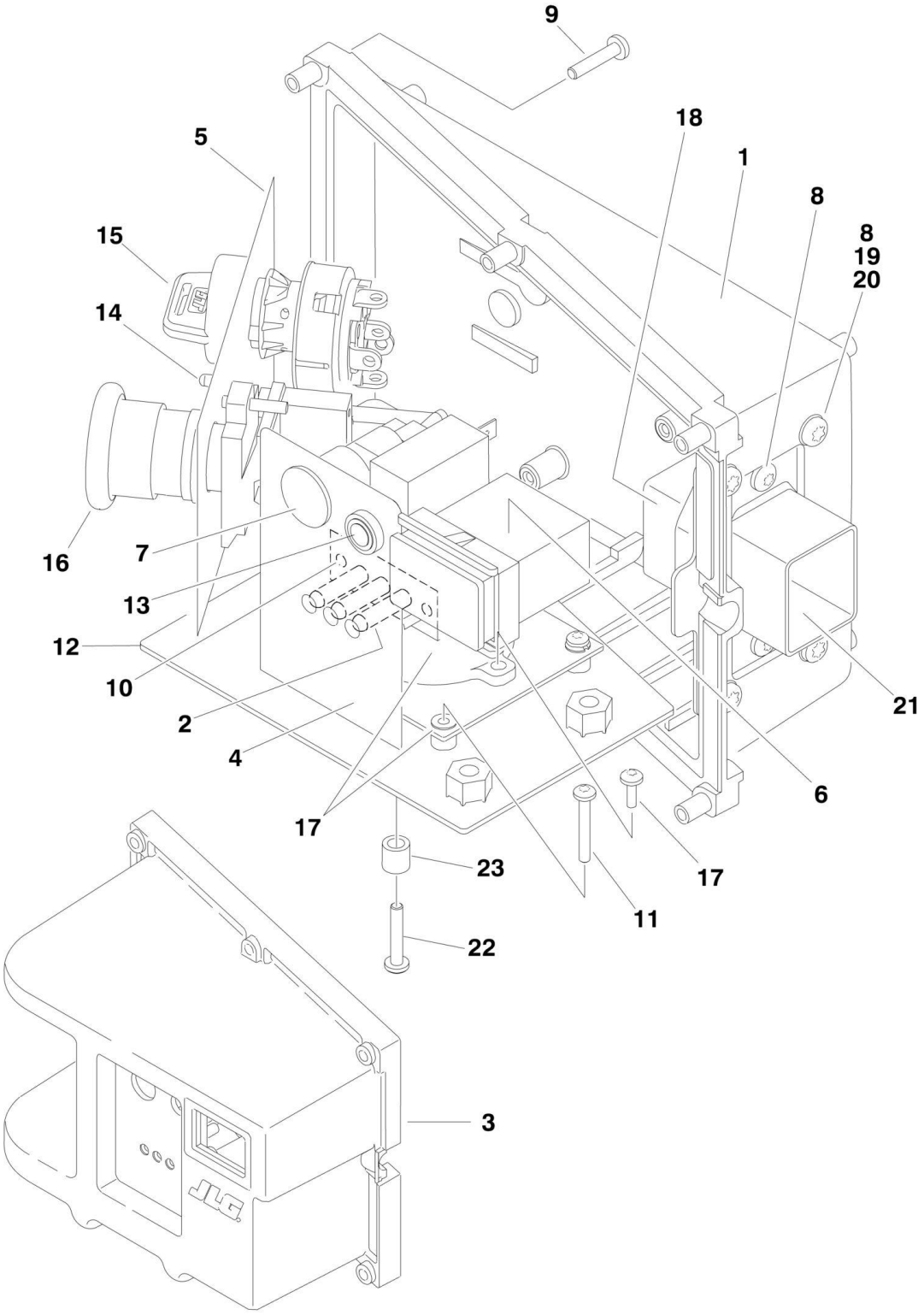

FIGURE 2-4. GROUND CONTROL ASSEMBLY (MACHINES WITH 1001112456 DRIVE MODULE)

ITEM	PART NUMBER	QTY	DESCRIPTION	REV
		Ref	**Note: For Module Identification, see note on Revision Log Page before ordering parts.**	
		Ref	**Note: All french Built Machines use the 1600346 Module.**	
		Ref	**Note: All China Built Machines use the 1001092456 Module**	
		Ref	**GROUND CONTROL ASSEMBLY (MACHINES WITH 1001122456 DRIVE MODULES)**	
	1001114929	Ref	**Ground Control Assembly - ANSI and ANSI Export Specs (Prior to SN 0200233359)**	B
	1001114929	Ref	**Ground Control Assembly - ANSI and ANSI Export Specs (Prior to SN 0200233359)**	B
	1001166194	Ref	**Ground Control Assembly - ANSI and ANSI Export Specs (SN 0200233359 to Present)**	E
	1001114931	Ref	**Ground Control Assembly - Australian Specs (Prior to SN 0200203535)**	B
	1001114929	Ref	**Ground Control Assembly - Australian Specs (SN 0200203535 through 0200233359)**	B
	1001166194	Ref	**Ground Control Assembly - Australian Specs (SN 0200233359 to Present)**	E
	1001114931	Ref	**Ground Control Assembly - CE Specs (Prior to SN 0200238468)**	B
	1001166196	Ref	**Ground Control Assembly - CE Specs (SN 0200238468 to Present)**	D
1	0380025	1	Box, Ground Control	
2	0610161	1	Board, PC (Battery Charger LED)	
3	1671105	1	Cover, Front	
4		Ref	Decal - LED Options:	
4	1705696	1	ANSI and ANSI Export Specs	
4	1705697	1	CE and Australian Specs	
5	1705698	1	Decal - Function	
6	2420172	1	Hourmeter	
7	3520193	1	Plug	
8	3900336	6	Screw, Torx #10-32NC x 1/2in	
9	3900338	6	Screw, Torx M4 x 20mm	
10	3900339	2	Screw, Plastite #6 x 1/2in	
11	3900356	4	Screw, Torx M3.5 x 16mm	
11	1001180090	4	Screw, Torx M3.5 x 20mm	
12	4340739	1	Plate, Mounting (Used with Reiker Tilt Module)	
12	1001165315	1	Plate, Mounting (Used with Parker Tilt Module)	
13	4360069	1	Breaker, Circuit - 10 Amp	
14	4360328	1	Switch, Toggle	
15		Ref	Keyswitch Options:	
15	4360469	1	ANSI and ANSI Export Specs	
15	4360470	1	Australian Specs (USA Built Machines) **(Prior to SN 0200203535)**	
15	4360470	1	Australian Specs (All French Built Machines)	
15	4360469	1	Australian Specs (USA Built Machines) **(SN 0200203535 to Present)**	
15	4360469	1	Australian Specs (All China Built Machines)	
15	4360470	1	CE Specs	
15	2860030	1	Key, Replacement (Fits All Specs)	
16	4360475	1	Switch, Emergency Stop	
16	7020175	1	Cap	

ITEM	PART NUMBER	QTY	DESCRIPTION	REV
16	7020176	1	Block, Contact	
17	1001114933	NLA	Module, Tilt - Reiker (ANSI, ANSI EXPORT AND AUSTRALIAN SPECS) (Use p/n 1001169392) **(Prior to SN 0200233359)**	
17	1001114933	NLA	Module, Tilt - Reiker (CE SPECS) (Use p/n 1001169392) **(Prior to SN 0200238468)**	
17	1001166255	1	Module, Tilt - Parker (ANSI, ANSI EXPORT AND AUSTRALIAN SPECS) **(SN 0200233359 to Present)**	
17	1001166255	1	Module, Tilt - Parker (CE SPECS) **(SN 0200238468 to Present)**	
18	1001114937	1	Mount, Harness Bulkhead	
19	3321005	4	Locknut #10-32NC	
20	4751000	4	Flatwasher #10	
21	1001114935	1	Harness, Control Box (See ELECTRICAL SECTION for Breakdown) (Use with Reiker Tilt Module)	
21	1001167256	1	Harness, Control Box (See ELECTRICAL SECTION for Breakdown) (Use with Parker Tilt Module)	
22	1001165284	1	Fastener (Use with Parker Tilt Module)	
23	1001165286	1	Spacer (Use with Parker Tilt Module)	
	0274791	Ref	**ANTI-VANDELISM PACKAGE INSTALLATION (NOT SHOWN)**	A
	1671124	1	Cover, Ground Control Box	

FIGURE 2-5. BATTERIES AND COVERS INSTALLATION

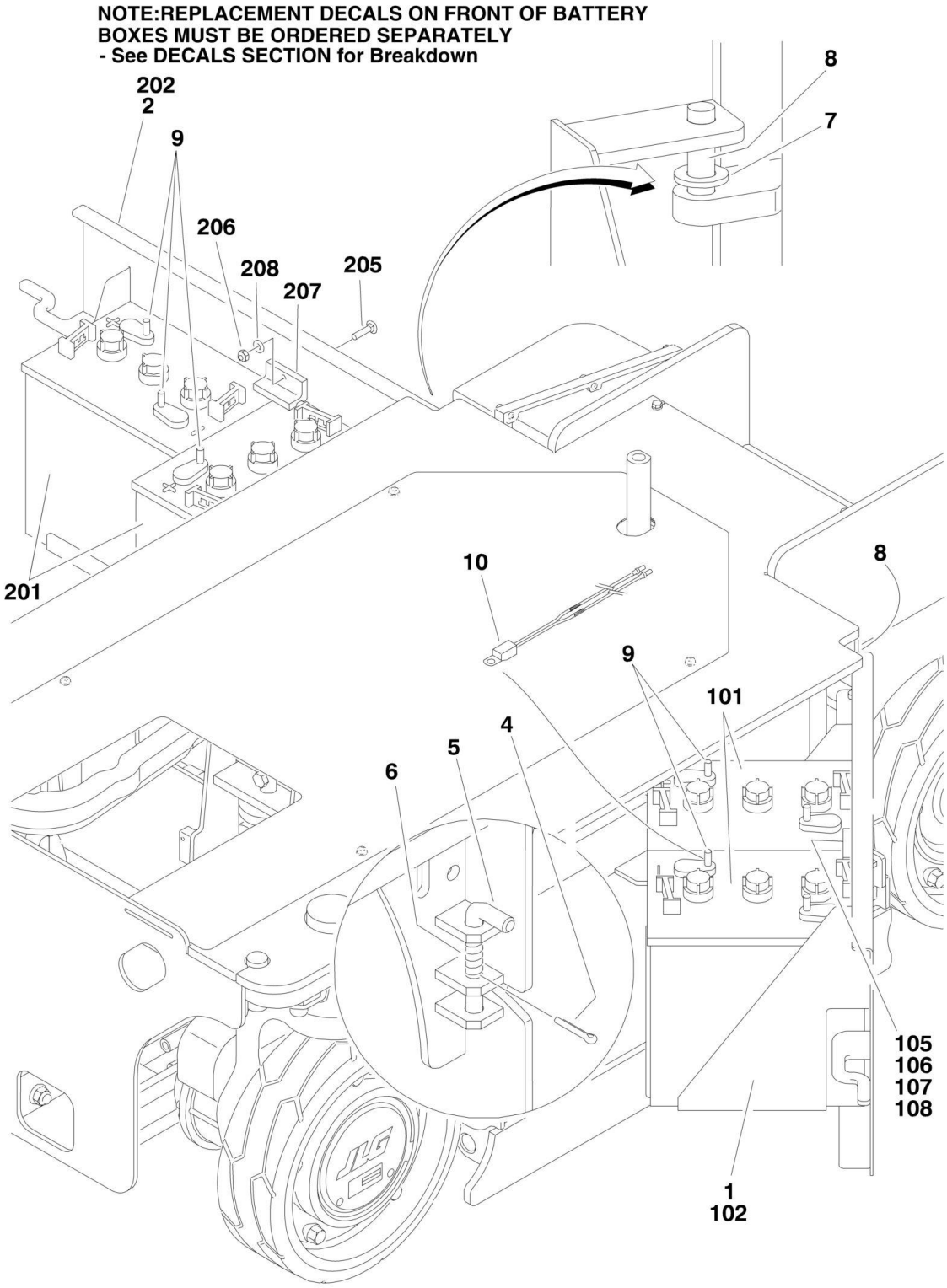

FIGURE 2-5. BATTERIES AND COVERS INSTALLATION

ITEM	PART NUMBER	QTY	DESCRIPTION	REV
		Ref	**BATTERIES AND COVERS INSTALLATION**	
		Ref	**Note: For Module Identification, see note on Revision Log Page before ordering parts.**	
	0274561	Ref	**Machines with 1600346 Drive Module and GC Type Batteries**	G
	1001117838	Ref	**Machines with 1001092456 Drive Module and GC Type Batteries**	C
	1001155025	Ref	**Machines with 1001092456 Drive Module and AGM and EVG Type Batteries**	B
1		Ref	Battery Box Assembly (Left) Options (See Items 101-108 for Breakdown):	
1	0861747	Ref	Box for GC Type Batteries	
1	1001155029	Ref	Box for AGM and EVG Type Batteries	
2		Ref	Battery Box Assembly (Right) Options (See Items 201-208 for Breakdown):	
2	0861748	Ref	Box for GC Type Batteries	
2	1001155030	Ref	Box for AGM and EVG Type Batteries	
3		Ref	Battery Cable Kit Options (Not Shown - See ELECTRICAL SECTION for Breakdown):	
		Ref	**Note: Requires identification of drive module before ordering parts. Refer to Revision Log Page .**	
3	2902444	1	Machines with p/n 1600346 Drive Module	
3	1001117837	1	Machines with p/n 1001092456 Drive Module	
4	3391408	2	Pin, Split	
5	3423243	2	Pin, Door Latch	
6	4160214	2	Spring, Door Latch	
7	4812100	AR	Flatwasher 12mm	
8	3020039	AR	Lubricant	
9	0100048	AR	Grease, Dielectric	
10	1001127269	1	Temperature Sensor Kit (Includes p/n 1001112113 Sensor, Wire Nut and Instructions)	
		Ref	**BATTERY BOX ASSEMBLY (LEFT)**	
	0861747	Ref	**Box for GC Type Batteries**	C
	1001155029	Ref	**Box for AGM and EVG Type Batteries**	A
101		Ref	Battery Options:	
101	0400215	2	GC Type Battery	
101	1001112112	2	AGM and EVG Type Battery	
102	3380599	1	Tray (Left)	
105	0630587	1	Bolt, Carriage M6 x 25mm	
106	3290605	1	Locknut M6	
107	4220286	1	Block	
108	4811700	1	Flatwasher M6	
		Ref	**BATTERY BOX ASSEMBLY (RIGHT)**	
		Ref	**Box for GC Type Batteries**	C
	1001155030	Ref	**Box for AGM and EVG Type Batteries**	A
201		Ref	Battery Options:	
201	0400215	2	GC Type Battery	
201	1001112112	2	AGM and EVG Type Battery	
202	3380600	1	Tray (Right)	
205	0630587	1	Bolt, Carriage M6 x 25mm	
206	3290605	1	Locknut M6	
207	4220286	1	Block	

ITEM	PART NUMBER	QTY	DESCRIPTION	REV
208	4811700	1	Flatwasher M6	

SECTION 3 - MAST

FIGURE 3-1. MAST INSTALLATION

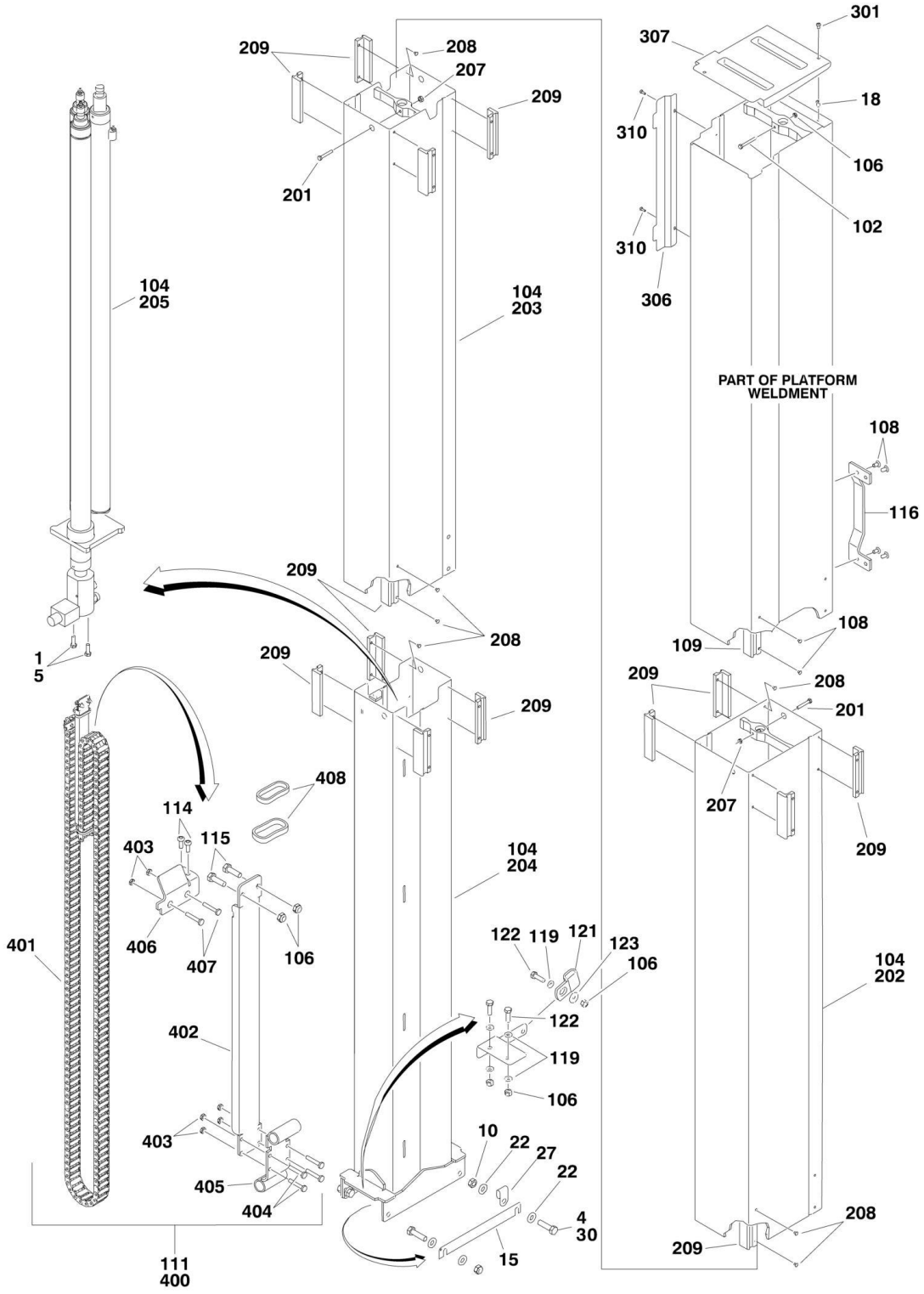

FIGURE 3-1. MAST INSTALLATION

ITEM	PART NUMBER	QTY	DESCRIPTION	REV
		Ref	**MAST INSTALLATION**	
	1001098653	Ref	**All Specs Except Australian and CE Specs (USA Built Machines) (Prior to SN 0200196530)**	G
	1001098653	1	**All Specs Except Australian and CE Specs (All French Built Machines)**	G
	0274552	Ref	**All Specs Except Australian and CE Specs (USA Built Machines) (SN 0200196530 to Present)**	R
	0274552	1	**All Specs Except Australian and CE Specs (All China Built Machines)**	R
	1001100633	Ref	**Australian Specs**	D
	0274552	Ref	**CE Specs**	R
1	0100011	AR	Compound, Locking	
4	0761217	4	Bolt M12 x 45mm **(Prior to SN 0200230097)**	
4	0771217	3	Bolt M12 X 45 mm **(SN 0200230097 to Present)**	
4	0771219	1	Bolt M12 X 55 mm **(SN 0200230097 to Present)**	
5	0760812	2	Bolt M8 x 25mm	
10		Ref	Locknut Options:	
10	8310625	AR	3/8in-16NC	
10	3291205	AR	M12 **(Prior to SN 0200230097)**	
10	3331211	AR	M12 **(SN 0200230097 to Present)**	
15	4071111	AR	Shim	
18	3820037	2	Rivnut M6	
18	2080043	2	Rivnut 1/4in-20NC	
22	5241200	8	Flatwasher M12 Hardened	
27	1001102858	1	Clamp	
30	0100019	1	Compound, Locking	
		Ref	**MAST SUB-ASSEMBLY**	
	1001098727	Ref	**All Specs Except Australian and CE Specs (USA Built Machines) (Prior to SN 0200196530)**	C
	1001098727	1	**All Specs Except Australian and CE Specs (All French Built Machines)**	C
	0274567	Ref	**All Specs Except Australian and CE Specs (USA Built Machines) (SN 0200196530 to Present)**	L
	0274567	1	**All Specs Except Australian and CE Specs (All China Built Machines)**	L
	0274567	Ref	**Australian and CE Specs**	L
102	0700618	1	Bolt M6 x 50mm	
104		Ref	Mast Assembly (See Items 201-210 for Breakdown)	
104	1001098728	1	All Specs Except Australian and CE Specs (USA Built Machines) **(Prior to SN 0200196530)**	
	1001098728	1	All Specs Except Australian and CE Specs (All French Built Machines)	
104	0801530	1	All Specs Except Australian and CE Specs (USA Built Machines) **(SN 0200196530 to Present)**	
	0801530	1	All Specs Except Australian and CE Specs (All China Built Machines)	
104	0801530	1	Australian and CE Specs	
106	3290605	AR	Locknut M6	
108	3820019	12	Rivet	
109		Ref	Pad, Slide Options:	
109	4700042	AR	Pad, Slide (8.7mm)	
109	1001092165	AR	Pad, Slide (9.7mm) (Note: Identifiable by notch at top and	

ITEM	PART NUMBER	QTY	DESCRIPTION	REV
			bottom of bolted on side)	
		Ref	**Note: Use p/n 1001092165 as replacement whenever possible. Combination of both types of pads may be used.**	
111	4923503	1	Powertrack and Cable Assembly (See Items 401-406 for Breakdown)	
114	4191406	2	Setscrew M4 x 12mm	
115	0760608	2	Bolt M6 x 16mm 9	
116	4160220	1	Spring, Mast Cable/Hose	
117	0100040	AR	Adhesive (Not Shown)	
119	4811700	4	Flatwasher 6mm	
120	1001156211	1	Bracket, Cable Support **(SN 0200221047 to Present)**	
121	1001102858	1	Clamp **(SN 0200221047 to Present)**	
122	0760610	3	Bolt M6 x 20mm **(SN 0200221047 to Present)**	
123	4811702	1	Flatwasher 6mm **(SN 0200221047 to Present)**	
		Ref	**MAST ASSEMBLY**	
	1001098728	Ref	**All Specs Except Australian and CE Specs (USA Built Machines) (Prior to SN 0200196530)**	A
	1001098728	1	**All Specs Except Australian & CE Specs (All French Built Machines)**	A
	0801530	Ref	**All Specs Except Australian and CE Specs (USA Built Machines) (SN 0200196530 to Present)**	L
	0801530	1	**All Specs Except Australian & CE Specs (All China Built Machines)**	L
	0801530	Ref	**Australian and CE Specs**	L
201	0700616	1	Bolt M6 x 40mm	
202		Ref	Mast, Outer Mid Options:	
202	1001098730	1	All Specs Except Australian and CE Specs (USA Built Machines) **(Prior to SN 0200196530)**	
202	1001098730	1	All Specs Except Australian and CE Specs (All French Built Machines)	
202	0801532	1	All Specs Except Australian and CE Specs (USA Built Machines) **(SN 0200196530 to Present)**	
	0801532	1	All Specs Except Australian and CE Specs (All China Built Machines)	
202	0801532	1	Australian and CE Specs	
203		Ref	Mast, Inner Mid Options:	
203	1001098731	1	All Specs Except Australian and CE Specs (USA Built Machines) **(Prior to SN 0200196530)**	
203	1001098731	1	All Specs Except Australian and CE Specs (All French Built Machines)	
203	0801533	1	All Specs Except Australian and CE Specs (USA Built Machines) **(SN 0200196530 to Present)**	
203	0801533	1	All Specs Except Australian and CE Specs (All China Built Machines)	
203	0801533	1	Australian and CE Specs	
204		Ref	Mast, Inner Options:	
204	1001098732	1	All Specs Except Australian and CE Specs (USA Built Machines) **(Prior to SN 0200196530)**	
204	1001098732	1	All Specs Except Australian and CE Specs (All French Built Machines)	
204	0801534	1	All Specs Except Australian and CE Specs (USA Built Machines) **(SN 0200196530 to Present)**	
	0801534	1	All Specs Except Australian and CE Specs (All China Built Machines)	
204	0801534	1	Australian and CE Specs	

ITEM	PART NUMBER	QTY	DESCRIPTION	REV
205	1684469	1	Lift Cylinder Assembly (See CYLINDER SECTION for Breakdown)	
207	3290605	2	Locknut M6	
208	3820019	40	Rivet	
209		Ref	Pad, Slide Options:	
209	4700042	AR	Pad, Slide (8.7mm)	
209	1001092165	AR	Pad, Slide (9.7mm) (Note: Identifiable by notch at top and bottom of bolted on side)	
		Ref	**Note: Use p/n 1001092165 as replacement whenever possible. Combination of both types of pads may be used.**	
210	0100040	AR	Adhesive (Not Shown)	
		Ref	Mast Kit Options:	
	1001098733	1	Kit (Includes Items 202-204) for All Specs Except Australian and CE Specs (USA Built Machines) **(Prior to SN 0200196530)**	A
	1001098733	1	Kit (Includes Items 202-204) for All Specs Except Australian and CE Specs (All French Built Machines)	A
	2902439	1	Kit (Includes Items 202-204 & 208-210) for All Specs Except Australian and CE Specs (USA Built Machines) **(SN 0200196530 to Present)**	M
	2902439	1	Kit (Includes Items 202-204 & 208-210) for All Specs Except Australian & CE Specs (All China Built Machines)	M
	2902439	1	Kit (Includes Items 202-204 & 208-210) for Australian and CE Specs	M
	0274560	Ref	**COVERS INSTALLATION**	I
301	3900357	2	Bolt M6 x 16mm	
301	3900258	2	Screw 1/4in-20NC x 3/4in	
306	3380605	1	Panel, Front	
307	3380612	1	Cover, Top	
310	4191406	2	Setscrew M4 x 12mm	
	4923503	Ref	**POWERTRACK ASSEMBLY**	H
		Ref	**Note: See ELECTRICAL SECTION for Additional Components.**	
400	1001100163	1	Carrier Assembly	
401	1180404	1	Carrier, Power Track (No Repair Parts Available)	
402	1271646	1	Channel, Push Tube	
403	3290405	6	Locknut M4	
404	4031509	4	Screw M4 x 25mm	
405	1001095304	1	Shield, Power Track	
406		Ref	Mounting Foot Options:	
406	4341256	1	French Built Machines (Use p/n 1001103349) **(Prior to SN A200007893)**	
406	1001100170	1	French Built Machines **(SN A200007893 through A200009897)**	
406	1001100170	1	USA Built Machines	
406	1001100170	1	China Built Machines	
407		Ref	Screw M4 Options:	
407	4010412	2	French Built Machines **(Prior to SN A200007893)**	
407	1001100176	2	French Built Machines **(SN A200007893 through A200009897)**	
407	1001100176	2	USA Built Machines	
407	1001100176	2	China Built Machines	
408	4240033	3	Tie-Strap	

SECTION 4 - PLATFORM

FIGURE 4-1. PLATFORM INSTALLATION

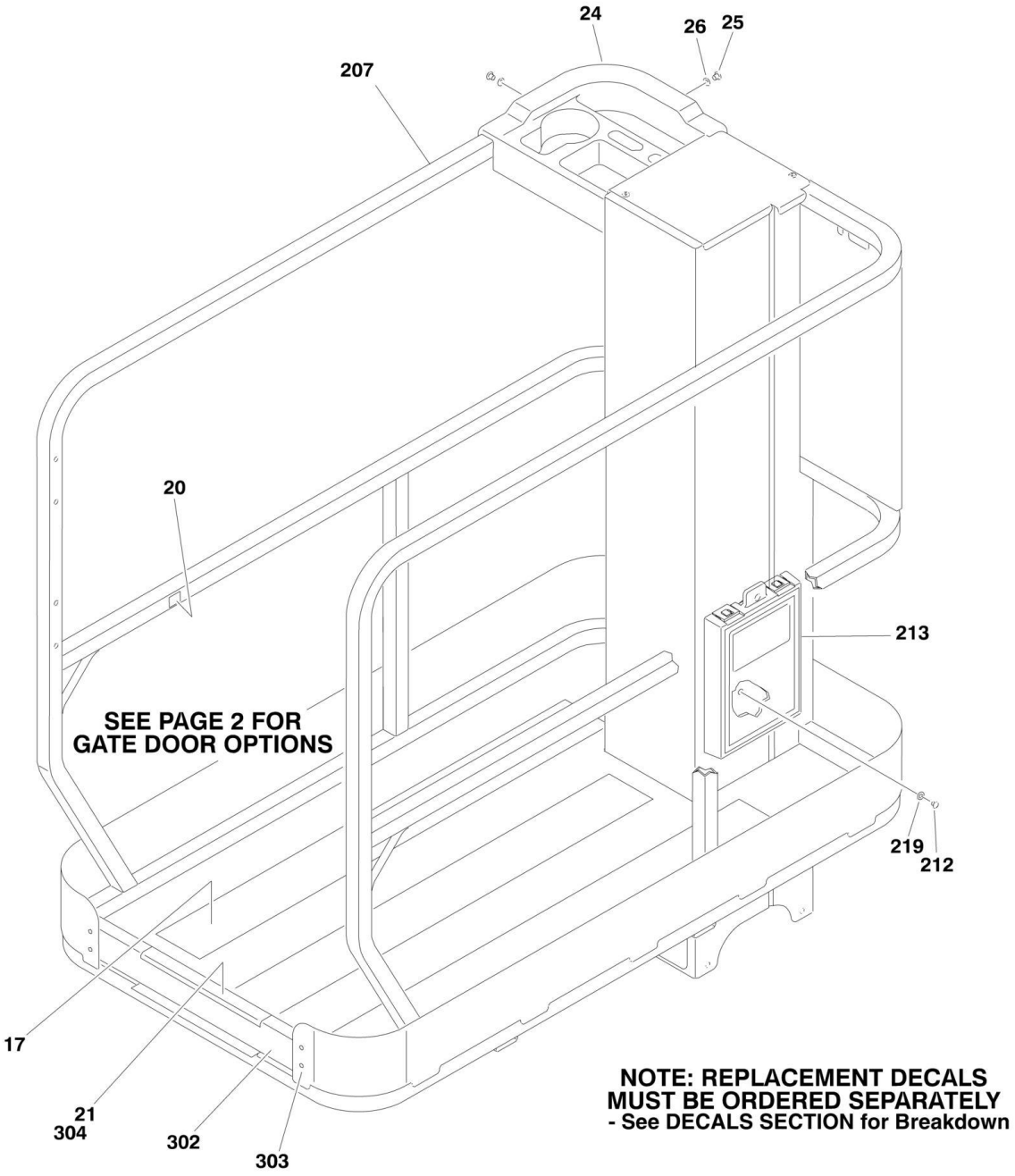

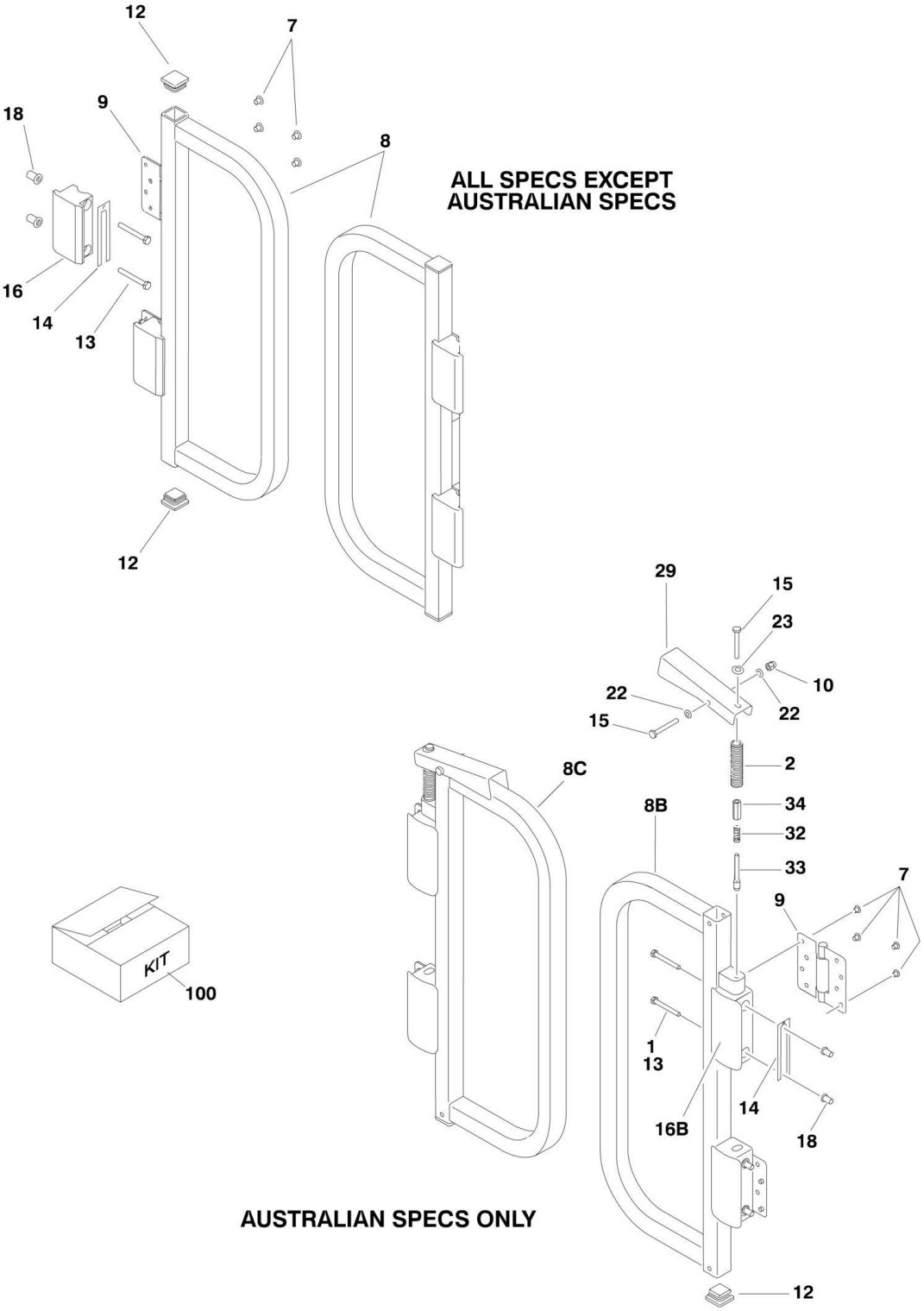
12
7
18
9
8
ALL SPECS EXCEPT
AUSTRALIAN SPECS
16
14
13
12
29
15
23
10
22
22
15
2
8C
34
8B
32
33
7
9
KIT
100
1
13
14
16B
18
AUSTRALIAN SPECS ONLY
12

FIGURE 4-1. PLATFORM INSTALLATION

ITEM	PART NUMBER	QTY	DESCRIPTION	REV
		Ref	**PLATFORM INSTALLATION**	
	1001098653	Ref	**All Specs Except Australian and CE Specs (USA Built Machines) (Prior to SN 0200196530)**	G
	1001098653	Ref	**All Specs Except Australian and CE Specs (All French Built Machines)**	G
	0274552	Ref	**All Specs Except Australian and CE Specs (USA Built Machines) (SN 0200196530 to Present)**	R
	0274552	Ref	**All Specs Except Australian and CE Specs (All China Built Machines)**	R
	1001100633	Ref	**Australian Specs**	D
	0274552	Ref	**CE Specs**	R
1	0100011	AR	Compound, Locking	
2	280013	6 in/15cm	Conduit (Australian Spec Only)	
6	0940088	NLA	Bumper (Use p/n 1001008575) (Not Shown - Located on Frame)	
		Ref	**Note: Recommend purchasing item 11 when replacing Bumper.**	
7	2080040	16	Fastener, Huck	
8		Ref	Gate Options:	
8A	2410021	2	All Specs Except Australian Spec	
8B	1001100630	1	Australian Spec Left Side (from Operators Position)	
8C	1001100631	1	Australian Spec Right Side (from Operators Position)	
9	2600281	4	Hinge	
10	3290606	2	Nut M6 (Australian Spec Only)	
11	3290805	2	Nut M8 (Not Shown - Located on Frame)	
12	3520072	AR	Cap-Plug	
13	0700618	8	Bolt M6 x 50mm	
13	0641416	8	Bolt 1/4in-20NC x 2in	
14	4071095	AR	Shim	
15	4010618	4	Screw M6 x 50mm (Australian Spec Only)	
16		Ref	Stop Options:	
16A	4220233	NLA	All Specs Except Australian Spec (Use p/n 4220309)	
16B	1001100141	4	Australian Spec	
17	4420072	3	Tape, Anti-Skid	
18	3820037	8	Rivnut M6	
18	2080043	8	Rivnut 1/4in-20NC	
20	4420072	NLA	Pad (Use p/n 3340962)	
21	4420070	1	Tape, Anti-Skid	
22	4811700	4	Flatwasher M6 (Australian Spec Only)	
23	4811900	2	Flatwasher M6 (Australian Spec Only)	
24	1580050	1	Tray	
25	4191406	3	Screw M4 x 12mm	
26	1001091102	3	Flatwasher, Large	
29	1001100142	2	Handle (Australian Spec Only)	
32	1001100634	2	Spring	
33	1001100918	2	Pin, Plunger	
34	1001100947	2	Turnbuckle	
		Ref	**KIT OPTIONS**	
100	1001101322	1	Gate Latch Kit (Australian Spec Only) (Includes 1-2, 7, 10, 13-15, 16B, 18, 22, 23, 29 & 32-34)	
		Ref	**PLATFORM SUB-ASSEMBLY**	
	1001098727	Ref	**All Specs Except Australian and CE Specs (USA Built**	C

ITEM	PART NUMBER	QTY	DESCRIPTION	REV
			Machines) (Prior to SN 0200196530)	
	1001098727	Ref	**All Specs Except Australian and CE Specs (All French Built Machines)**	C
	0274567	Ref	**All Specs Except Australian and CE Specs (USA Built Machines) (SN 0200196530 to Present)**	L
	0274567	Ref	**All Specs Except Australian and CE Specs (All China Built Machines)**	L
	0274567	Ref	**Australian and CE Specs**	L
207		Ref	Platform Weldment Options:	
207	1001098729	1	USA Built Machines **(Prior to SN 0200196530)**	
207	3510876	1	USA Built Machines **(SN 0200196530 to Present)**	
207	3510876	1	French and China Built Machines	
212	2080040	3	Fastener, Huck	
213	8990147	1	Box, Manual Storage	
213	70003486	2	Clip, Holder	
219	4811700	3	Flatwasher 6mm	
	0274553	Ref	**KICKPLATE INSTALLATION (AUSTRALIAN AND CE SPECS ONLY)**	D
302	3576089	1	Kickplate	
303	2080040	4	Fastener, Huck	
304	4420070	1	Tape, Anti-Skid	

FIGURE 4-2. PLATFORM CONSOLE BOX INSTALLATION

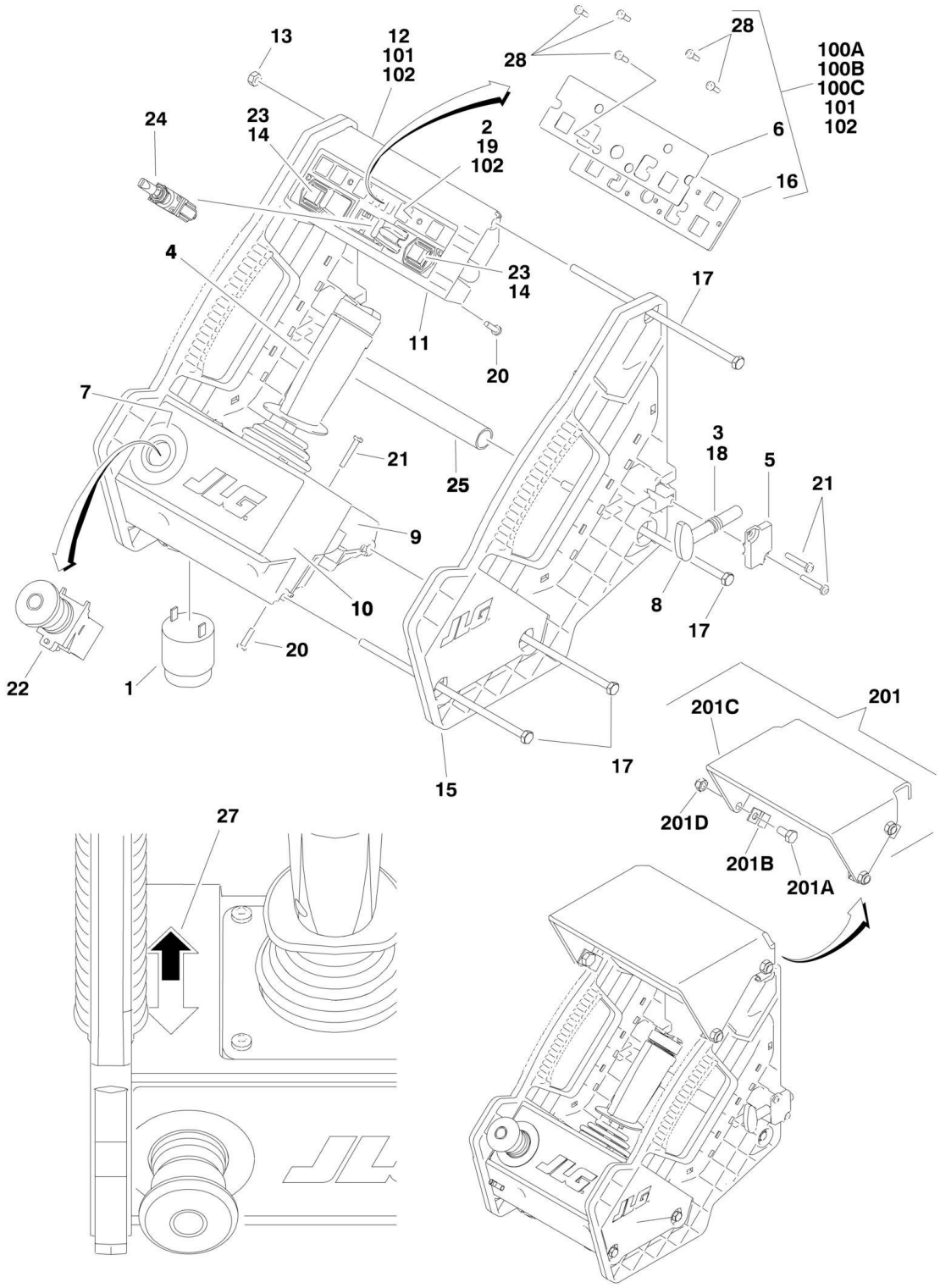

FIGURE 4-2. PLATFORM CONSOLE BOX INSTALLATION

ITEM	PART NUMBER	QTY	DESCRIPTION	REV
	0274554	Ref	**CONSOLE BOX INSTALLATION**	C
	1001091153	Ref	**Console Box Assembly (USA Built Machines)**	H
	0272778	Ref	**Console Box Assembly (French Built Machines) (Prior to SN A200006146)**	I
	1001091153	Ref	**Console Box Assembly (French Built Machines) (SN A200006146 to Present)**	H
	1001091153	Ref	**Console Box Assembly (China Built Machines) (SN B200000100 to Present)**	H
		Ref	**Note: When replacing complete assy, use p/n 1001091153.**	
1	0140011	1	Alarm	
2	Item 102	1	Platform Box Control Module (Was p/n 1600439)	
3	1380156	1	E-Clip	
4		Ref	Controller, Drive/Steer Options:	
4	1600345	NLA	P/Q Controller, Drive/Steer (USA Built Machines) (Use p/n 1001134438) (Original Equipment was p/n 1600345 -See DRIVE/STEER P/Q CONTROLLER ASSEMBLY for Breakdown) (For Service Replacement Components p/n 1600402 & 1001134438 - See DRIVE/STEER J.R. MERRITT CONTROLLER ASSEMBLY for Breakdown) **(Prior to SN 0200177164)**	
4	1600345	NLA	P/Q Controller, Drive/Steer (All French Built Machines) (Use p/n 1001134438) (Original Equipment was p/n 1600345 -See DRIVE/STEER P/Q CONTROLLER ASSEMBLY for Breakdown) (For Service Replacement Components p/n 1600402 & 1001134438 - See DRIVE/STEER J.R. MERRITT CONTROLLER ASSEMBLY for Breakdown) **(Prior to SN A200006537)**	
4	1600402	NLA	J.R. Merritt Controller, Drive/Steer (USA Built Machines) **(SN 0200177164 to Present)**	
4	1600402	NLA	J.R. Merritt Controller, Drive/Steer (All French Built Machines) (Use p/n 1001134438) **(SN A200006537 through A200009897)**	
4	1600402	NLA	J.R. Merritt Controller, Drive/Steer (All China Built Machines) (Use p/n 1001134438) **(SN B20000100 to Present)**	
5	1671098	1	Latch	
6		Ref	Decal - Icon Options:	
6	See Note	1	USA Built Machines (Was p/n 1001091272) (Note: Use Item 100C, 101 or 102)	
6	See Note	1	French Built Machines (Was p/n 1705674) (Note: Use Item 100A, 101 or 102) **(Prior to SN A200006146)**	
6	See Note	1	French Built Machines (was p/n 1001091272) (Note: Use Item 100B, 101 or 102) **(SN A200006146 through A200009897)**	
6	Not Available		China Built Machines **(SN B200000100 to Present)**	
7	1705676	1	Decal - Emergency Stop Ring	
8	2560179	1	Handle, Latch	
9	See Note	1	Housing, Joystick (Lower) (Was p/ns 2760113 & 1001091277) (Use p/n 1001091390)	
10	See Note	1	Mount, Joystick (Lower) (Was p/ns 2760114 & 1001091278) (Use p/n 1001091390)	
11		Ref	Housing, Module Mounting (Lower) Options:	
11	1001091279	1	USA Built Machines	
11	2760115	NLA	French Built Machines (Use p/n 1001091279) **(Prior to SN A200006146)**	
11	1001091279	1	French Built Machines **(SN A200006146 through A200009897)**	
11	1001091279	1	China Built Machines **(SN B200000100 to Present)**	

ITEM	PART NUMBER	QTY	DESCRIPTION	REV
12	See Note	1	Housing, Module Mounting (Upper) (Was p/ns 2760116 & 1001091280) (Note: Use Item 101 or 102)	
13	3300473	4	Nut M6	
14	3340968	2	Button (Includes Black Button Only)	
15	3380475	2	Panel, Side	
16		Ref	Plate, Decal Options:	
16	See Note	1	USA Built Machines (Was p/n 1001091283) (Note: Use Item 100C, 101 or 102)	
16	See Note	1	French Built Machines (Was p/n 3574249) (Note: Use Item 100A, 101 or 102) **(Prior to SN A200006146)**	
16	See Note	1	French Built Machines (Was p/n 1001091283) (Note: Use Item 100B, 101 or 102C) **(SN A200006146 through A200009897)**	
16	Not Available		China Built Machines **(SN B200000100 to Present)**	
17	3900333	4	Screw M6 x 190mm	
18	4160203	1	Spring, Compression	
19	4191306	5	Screw M3.5 x 12mm	
20	4191407	8	Screw M4 x 16mm	
21	4191409	6	Screw M4 x 25mm	
22	4360475	1	Switch, Emergency Stop	
22	7020175	1	Cap	
22	7020176	1	Block, Contact	
23	4360538	2	Strip, Switch and Membrane	
24	4360539	1	Switch, Toggle	
25	4568738	1	Tube, Spacer	
26	4922870	1	Harness, Platform Box (Not Shown - See ELECTRICAL SECTION for Breakdown)	
27	1703819	1	Decal - Directional Arrow	
28		Ref	Screw M3.5 x 12mm Options:	
28	1001091396	6	USA Built Machines	
28	4191306	6	French Built Machines **(Prior to SN A200006146)**	
28	1001091396	6	French Built Machines **(SN A200006146 through A200009897)**	
28	1001091396	6	China Built Machines **(SN B200000100 to Present)**	
		Ref	**Kit Options**	
100		Ref	Decal Kit Options:	
100	Not Available	1	Decal Kit for China Built Machines **(SN B20000100 to Present)**	
100A	1001091967	1	Decal Kit for French Built Machines (Includes Items 6, 16 & 28) **(Prior to SN A200006146)**	
		Ref	**Note: Two of item 6 are included in the kit - Use p/n 1705674. Dispose of the other decal.**	
		Ref	**Note: If housing has been replaced with Kit p/n 1001091393 or Kit p/n 1001091965, use Decal Kit p/n 1001091968.**	
100B	1001091968	1	Decal Kit for French Built Machines (Includes Items 6, 16 & 28) **(SN A200006146 through A200009897)**	
		Ref	**Note: Two of item 6 are included in the kit - Use p/n 1001091272. Dispose of the other decal.**	
100C	1001091968	1	Decal Kit for USA Built Machines (Includes Items 6, 16 & 28)	
		Ref	**Note: Two of item 6 are included in the kit - Use p/n 1001091272. Dispose of the other decal.**	
101	1001091393	1	Decal and Housing Kit (Includes Items 6, 12, 16 & 28)	
		Ref	**Note: Two of item 6 are included in the kit - Use p/n 1001091272. Dispose of the other decal.**	
102	1001091965	1	Decal, Housing and Module Kit (Includes Items 2, 6, 12, 14, 16, 19, 23, 24 & 28)	
		Ref	**Note: Two of item 6 are included in the kit - Use p/n**	

ITEM	PART NUMBER	QTY	DESCRIPTION	REV
			1001091272. Dispose of the other decal.	
		Ref	**PLATFORM BOX COVER INSTALLATION**	
	0273841	Ref	**USA Built Machines (Prior to SN 0200196453)**	B
	0273841	Ref	**All French Built Machines**	B
	1001118216	Ref	**USA Built Machines (SN 0200196453 to Present)**	A
	1001118216	Ref	**All China Built Machines**	A
201	2902341	NLA	Kit, Platform Box Shield (Use p/n 1001118215)	
201A	0760808	4	Bolt, (Metric) 8 x 16LG	
201B	1380159	4	Clip, Cover Mounting	
201C	1671161	NLA	Cover, Platform Box (Use p/n 1001116154)	
201D	3290805	4	Locknut, M8 x 1.25	
	0274791	Ref	**ANTI-VANDELISM PACKAGE INSTALLATION (NOT SHOWN)**	A
	3380625	1	Cover, Lockable Platform Console Box	

FIGURE 4-3. DRIVE/STEER P/Q CONTROLLER ASSEMBLY

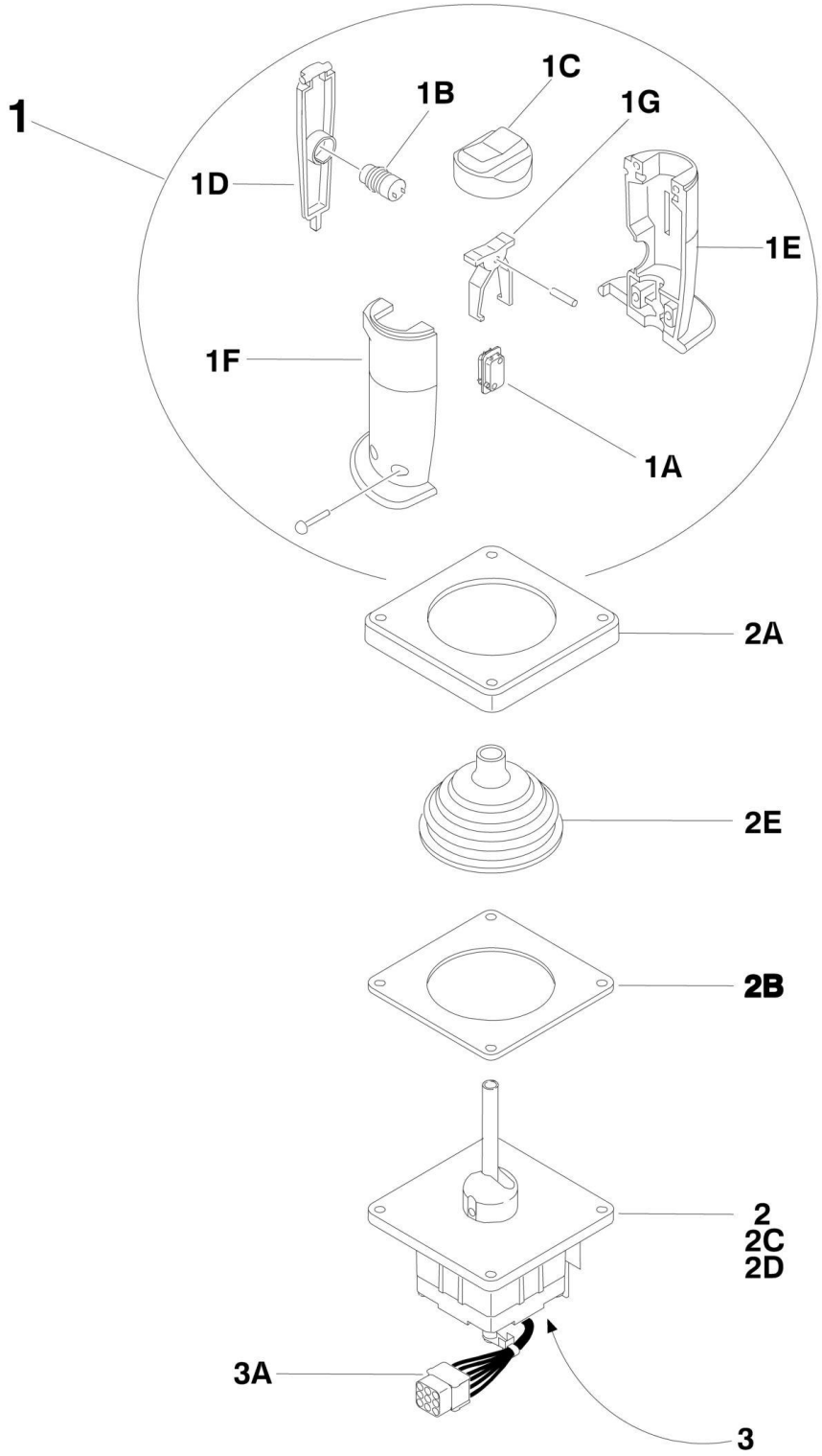

FIGURE 4-3. DRIVE/STEER P/Q CONTROLLER ASSEMBLY

ITEM	PART NUMBER	QTY	DESCRIPTION	REV
	1600345	Ref	**P/Q CONTROLLER ASSEMBLY**	
		Ref	**Note: Original Equipment Assembly p/n 1600345 may have been replaced with p/n 1001134438 as Service Replacement Assembly. Identify P/N before ordering replacement components. If equipped with p/n 1001134438 refer to next illustration.**	
1	7020551	1	Grip Assembly	
1A	7020500	2	Switch, Steer Rocker	
1B	7020501	1	Switch, Enable Push Button	
1C	7003790	1	Cap, Rubber Rocker (Includes Lock RIng)	
1D	7011997	1	Trigger	
1E	See Note	NSS	Grip - Right Half (Note: Use p/n 7020551)	
1F	See Note	NSS	Grip - Left Half (Note: Use p/n 7020551)	
1G	See Note	NSS	Actuator, Switch (Note: Use p/n 7020551)	
2	See Note	NSS	Handle/Housing Assembly (Note: Use p/n 1001134438)	
2A	7020552	1	Bezel	
2B	7020553	1	Gasket	
2C	7020554	1	Spring, Centering	
2D	7020555	1	Foot, Centering	
2E	7020556	1	Boot, Rubber	
3	See Note	NSS	Electrical Assembly (Not Shown) (Note: Use p/n 1001134438)	
3A	4460266	1	Connector, Receptacle - 9 Pin	
3A	4460226	7	Socket, Female	
3A	4460265	1	Plug, Male-9 Position (Part of Platform Box Harness)	
3A	4460227	7	Pin, Male (Part of Platform Box Harness)	

FIGURE 4-4. DRIVE/STEER J.R. MERRITT CONTROLLER ASSEMBLY

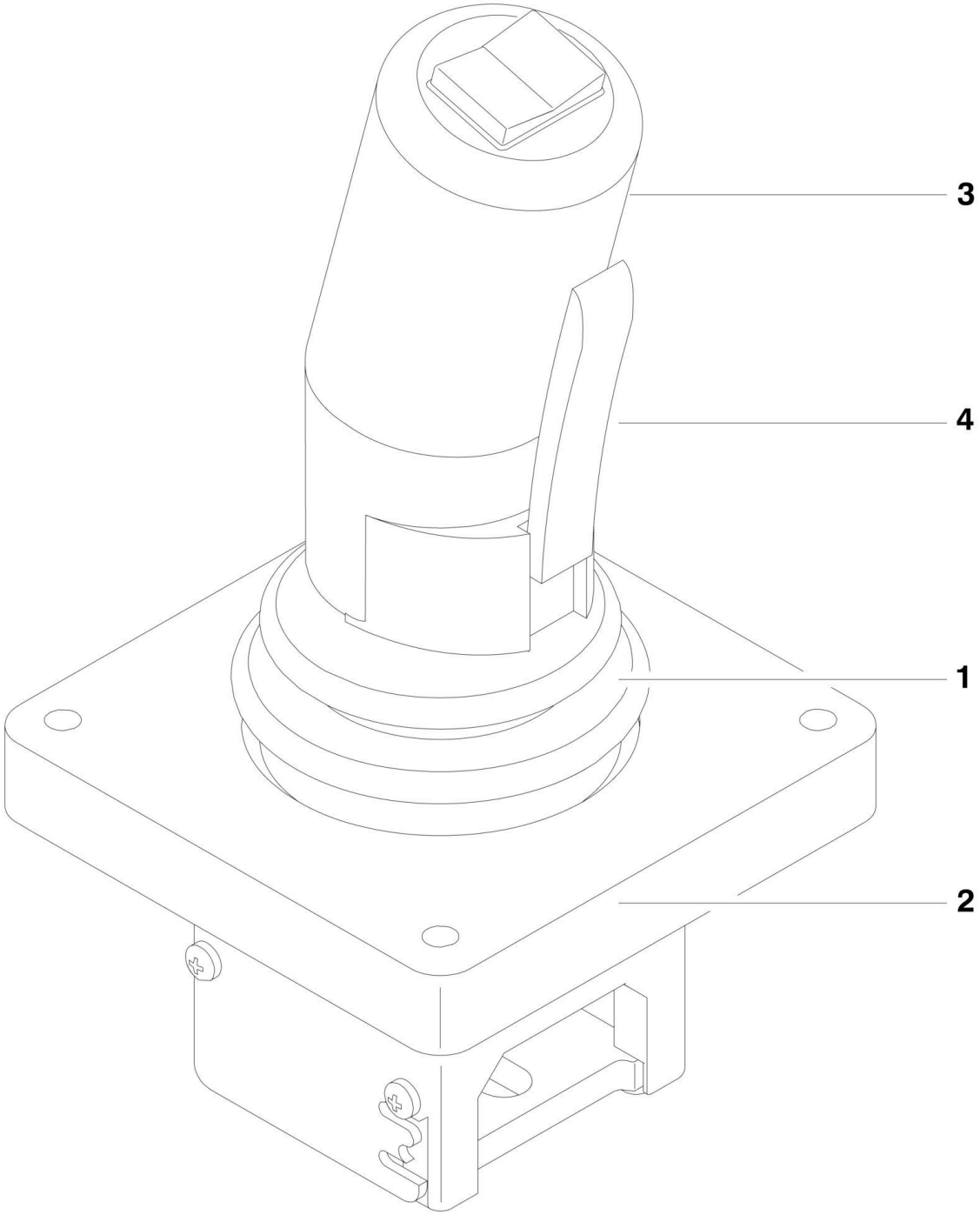

FIGURE 4-4. DRIVE/STEER J.R. MERRITT CONTROLLER ASSEMBLY

ITEM	PART NUMBER	QTY	DESCRIPTION	REV
	1600402	1	**J.R. MERRITT CONTROLLER ASSEMBLY**	
		Ref	**Note: Use p/n 1001134438 as replacement. Original Equipment was 1600402.**	
1	70001250	1	Boot, Panel	
2	70001252	1	Gasket, Mounting	
2	70001251	1	Bezel, Mounting	
3	70003650	1	Handle Repair Kit (Includes handle gasket, item#4 push button and item #4 lever installed in front handle half, back handle half, top actuator, boot and hardware.)	
3	70000084	1	Cap, Rubber	
3	70000082	1	Microswitch	
3	7027766	1	Ring, Retaining	
3	7027365	1	Actuator, Handle	
3	70001253	1	Gasket, Handle	
3	70000683	4	Washer, Neoprene	
3	70000685	2	Spacer, Plastic	
3	70000686	2	Screw (Top)	
3	70000684	2	Screw (Bottom)	
4	7027367	1	Switch, Push button	
4	7027765	1	Lever, Enable	

SECTION 5 - CYLINDER

FIGURE 5-1. LIFT CYLINDER ASSEMBLY

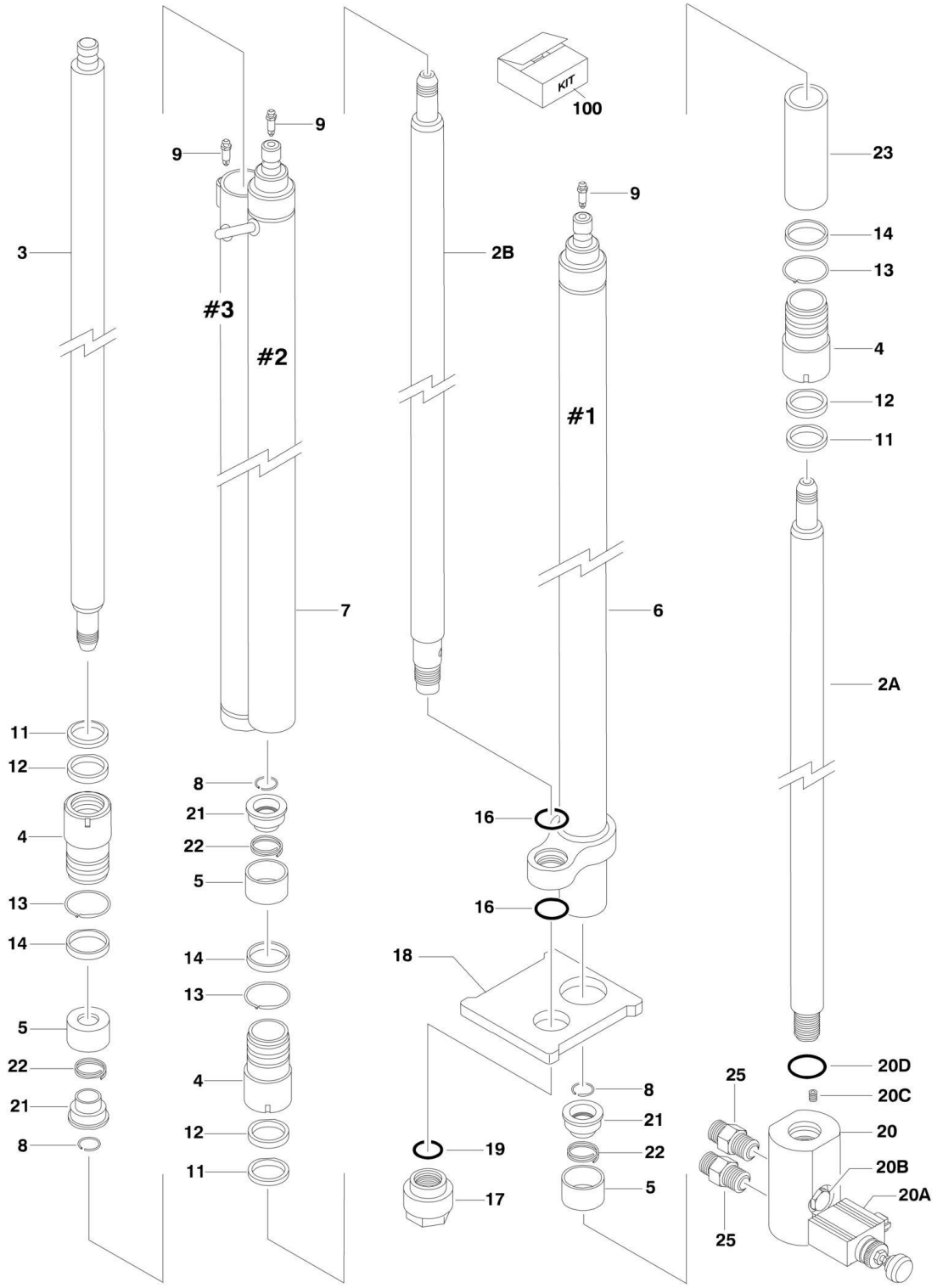

FIGURE 5-1. LIFT CYLINDER ASSEMBLY

ITEM	PART NUMBER	QTY	DESCRIPTION	REV
	1684469	Ref	**LIFT CYLINDER ASSEMBLY**	H
2		Ref	Rod Options:	
2A	70000732	1	Rod (Cylinder #1)	
2B	70000733	1	Rod (Cylinder #2)	
3	70000734	1	Rod (Cylinder #3)	
4	70000721	3	Head (Cylinders #1/#2/ #3)	
5	70000722	3	Piston - Outer (Cylinders #1/#2/ #3)	
6	See Note	NSS	Barrel (Cylinder #1) (Note: Purchase Complete Assembly)	
7	See Note	NSS	Barrel (Cylinders #2/#3) (Note: Purchase Complete Assembly)	
8	70000723	3	Ring, Retaining (Cylinders #1/#2/ #3)	
9	4640858	3	Bleeder (Cylinders #1/#2/ #3)	
11	See Note	3	Wiper (Cylinders #1/#2/ #3) (Note: Use Item 100)	
12	See Note	3	Seal (Cylinders #1/#2/ #3) (Note: Use Item 100)	
13	70000725	3	Ring, Retaining (Cylinders #1/#2/ #3)	
14	See Note	3	Seal (Cylinders #1/#2/ #3) (Note: Use Item 100)	
16	See Note	2	O-Ring (Cylinder #2 Guide) (Note: Use Item 100)	
17	70000726	1	Cap (Cylinder #2)	
18	70000727	1	Guide (Cylinder #2)	
19	See Note	1	O-Ring (Cylinder #2 Cap) (Note: Use Item 100)	
20	70000728	1	Valve Assembly	
20A	70000737	1	Cartridge, Solenoid	
20A	See Note	NLA	Seal Kit - 70000737 Valve (Note: Use p/n 70000737)	
20A	See Note	NSS	Coil, (Note: Use p/n 70000737)	
20A	70002720	1	Knob Kit (Includes Knob, Coil Nut, Spacer, Retaining Nut and Qty 2 Coil O-Rings)	
20B	70001254	1	Cartridge, Check	
20B	See Note	NSS	Seal Kit - 70001254 Valve (Note: Use p/n 70001254)	
20C	See Note	NSS	Orifice (Note: Use p/n 70001254)	
20D	See Note	NSS	O-Ring (Note: Use p/n 70001254)	
21	70000729	3	Piston - Inner (Cylinders #1/#2/ #3)	
22	70000730	3	Spring (Cylinders #1/#2/ #3)	
23	70000731	1	Spacer (Cylinder #1)	
25	2144609	2	Fitting, Straight	
100	70000735	1	Seal Kit - 1684469 Cylinder (Includes Items 11, 12, 14, 16 & 19)	

FIGURE 5-2. STEER CYLINDER ASSEMBLY

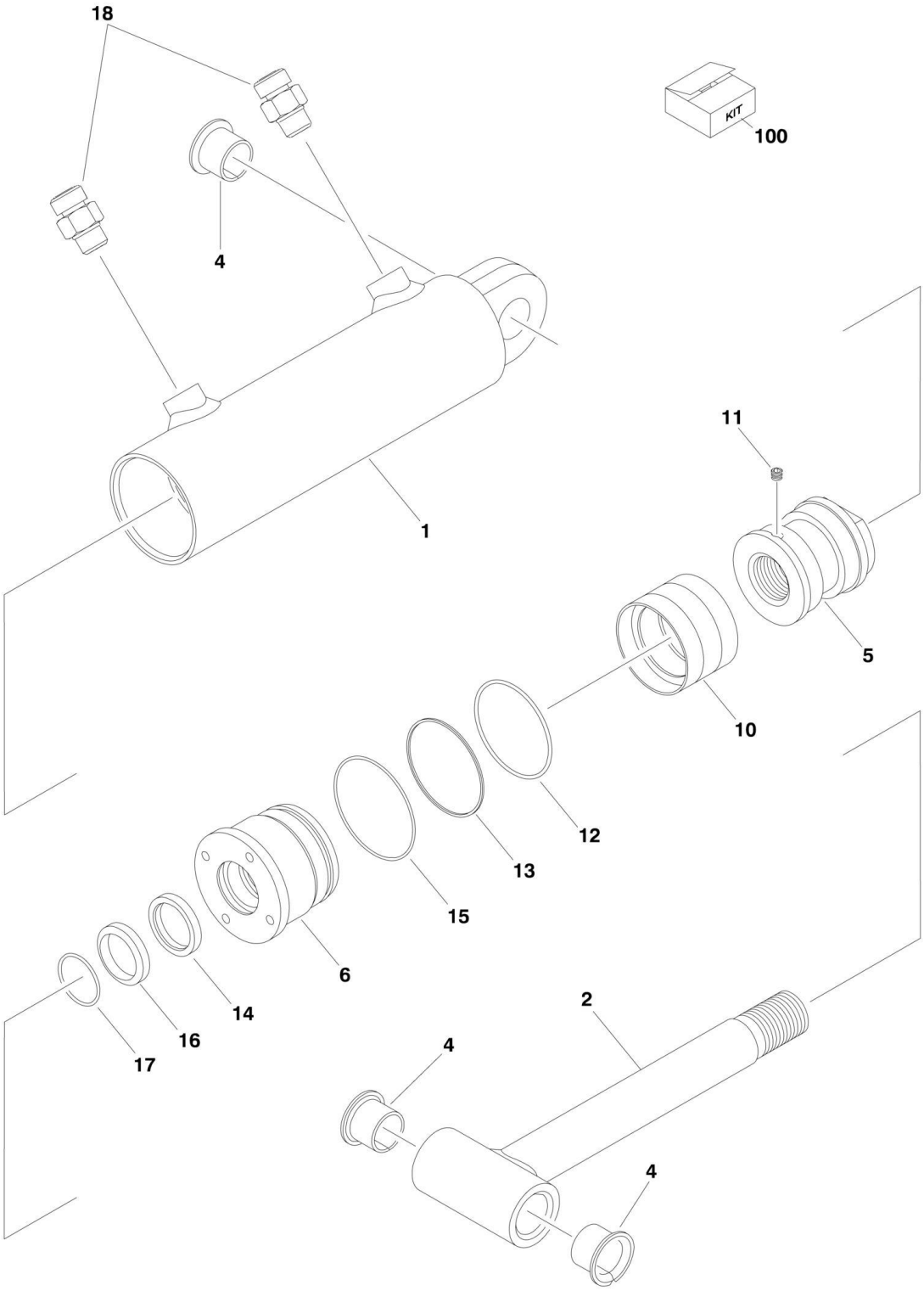

FIGURE 5-2. STEER CYLINDER ASSEMBLY

ITEM	PART NUMBER	QTY	DESCRIPTION	REV
	1684458	Ref	**STEER CYLINDER ASSEMBLY**	H
1	70000742	1	Barrel	
2	70000741	1	Rod	
4	0440236	3	Bushing	
5	70000738	1	Piston	
6	70000739	1	Head	
10	See Note	NSS	Seal (Note: Use Item 100)	
11	See Note	NSS	Setscrew (Note: Not Available - Purchase Locally)	
12	See Note	NSS	Seal (Note: Use Item 100)	
13	See Note	NSS	Ring, Back-up (Note: Use Item 100)	
14	See Note	NSS	Seal (Note: Use Item 100)	
15	See Note	NSS	O-Ring (Note: Use Item 100)	
16	See Note	NSS	Seal (Note: Use Item 100)	
17	See Note	NSS	O-Ring (Note: Use Item 100)	
18	2144605	2	Fitting, Straight	
100	70000743	1	Seal Kit - 1684458 Cylinder (Includes Items 10 & 12-17)	

SECTION 6 - HYDRAULIC

FIGURE 6-1. HYDRAULIC DIAGRAM

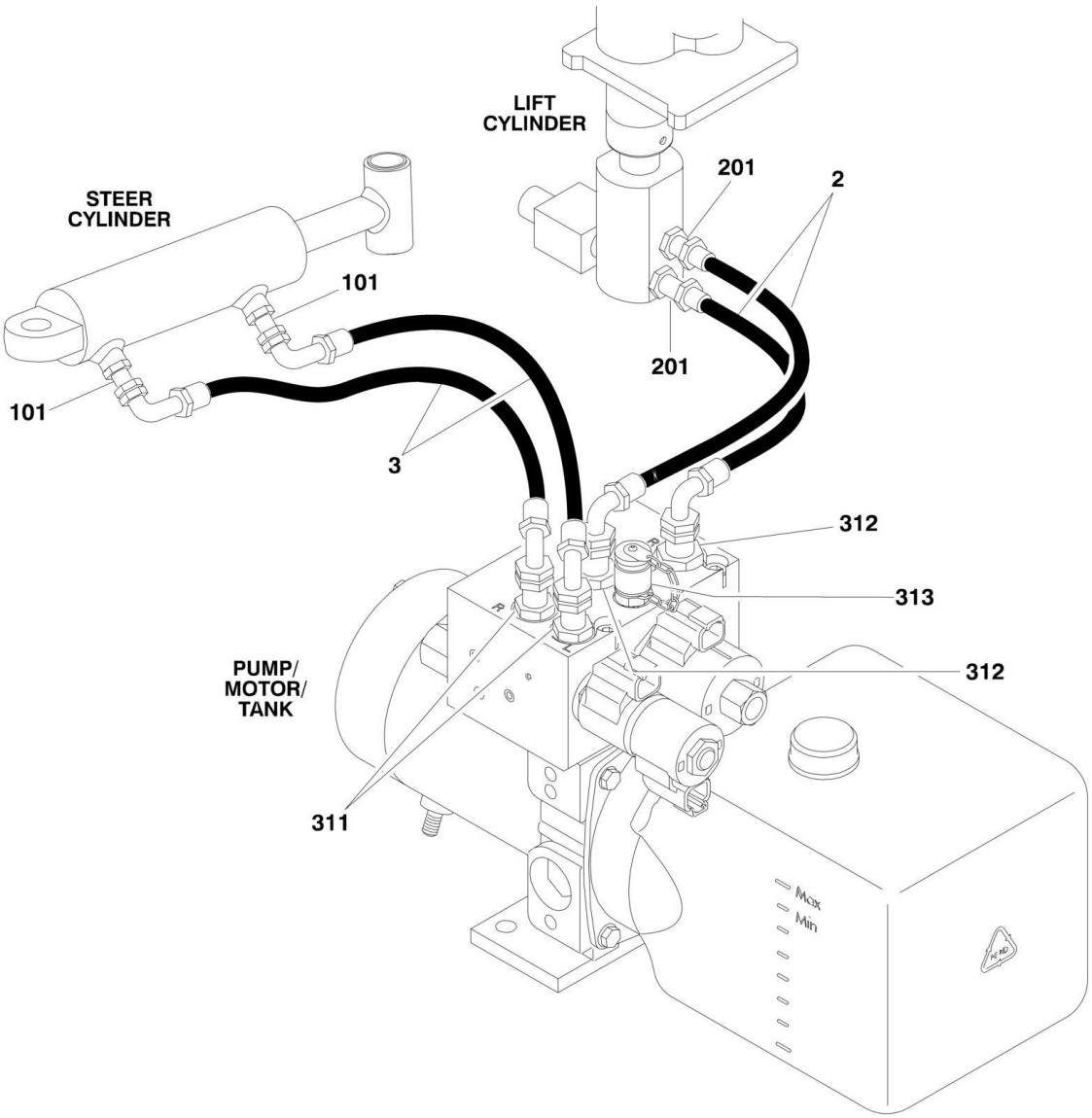

FIGURE 6-1. HYDRAULIC DIAGRAM

ITEM	PART NUMBER	QTY	DESCRIPTION	REV
		Ref	**HYDRAULIC COMPONENTS**	
	0274581	Ref	**Hydraulic Installation**	G
2		Ref	Hose (Lift) Options:	
2	See Note	2	French Built Machines **(Prior to SN A200009318)**	
2	1001101833	2	French Built Machines **(SN A200009318 to Present)**	
2	See Note	2	USA Built Machines **(Prior to SN 0200189255)**	
2	1001101833	2	USA Built Machines **(SN 0200189255 to Present)**	
2	1001101833	2	China Built Machines **(SN 0200189255 to Present)**	
		Ref	**Note: P/N was 2755002. Purchase p/ns 1001101833 Hose & 1001101362 Fitting as replacement.**	
3	2755003	2	Hose (Steer)	
	1684458	Ref	**Steer Cylinder Components**	H
101	2144605	2	Fitting, Straight	
	1684469	Ref	**Lift Cylinder Components**	H
201	2144609	2	Fitting, Straight	
		Ref	**Pump/Motor/Tank Components**	
	3600432	Ref	**French Built Machines (Original Equipment) (Prior to SN A200009318)**	I
	1001101832	Ref	**French Built Machines (Service Replacement) (Prior to SN A200009318)**	A
	1001101831	Ref	**French Built Machines (SN A200009318 to Present)**	C
	3600432	Ref	**USA Built Machines (Original Equipment) (Prior to SN 0200189255)**	I
	1001101832	Ref	**USA Built Machines (Service Replacement) (Prior to SN 0200189255)**	A
	1001101831	Ref	**USA Built Machines (SN 0200189255 to Present)**	C
	1001101831	Ref	**China Built Machines (SN 0200189255 to Present)**	C
311	2144605	2	Fitting, Straight	
312		Ref	Fitting Options:	
312	2144610	2	Straight Fitting	
312	1001101362	2	90, Fitting	
313	2221086	1	Fitting, Pressure Check	

SECTION 7 - ELECTRICAL

FIGURE 7-1. ELECTRICAL DIAGRAM LIST

ITEM	PART NUMBER	QTY	DESCRIPTION	REV
		Ref	**Note: Schematics not shown are available in the Service and Maintenance Manual.**	
		Ref	**ELECTRICAL DIAGRAM LIST**	
	1870188	Ref	**Electrical Schematics (Machines with 1600346 Drive Module)**	
	1001114879	Ref	**Electrical Schematics (Machines with 1001092456 Drive Module)**	

FIGURE 7-2. ELECTRICAL CONNECTORS INSTALLATION (MACHINES WITH 1600346 DRIVE MODULE)

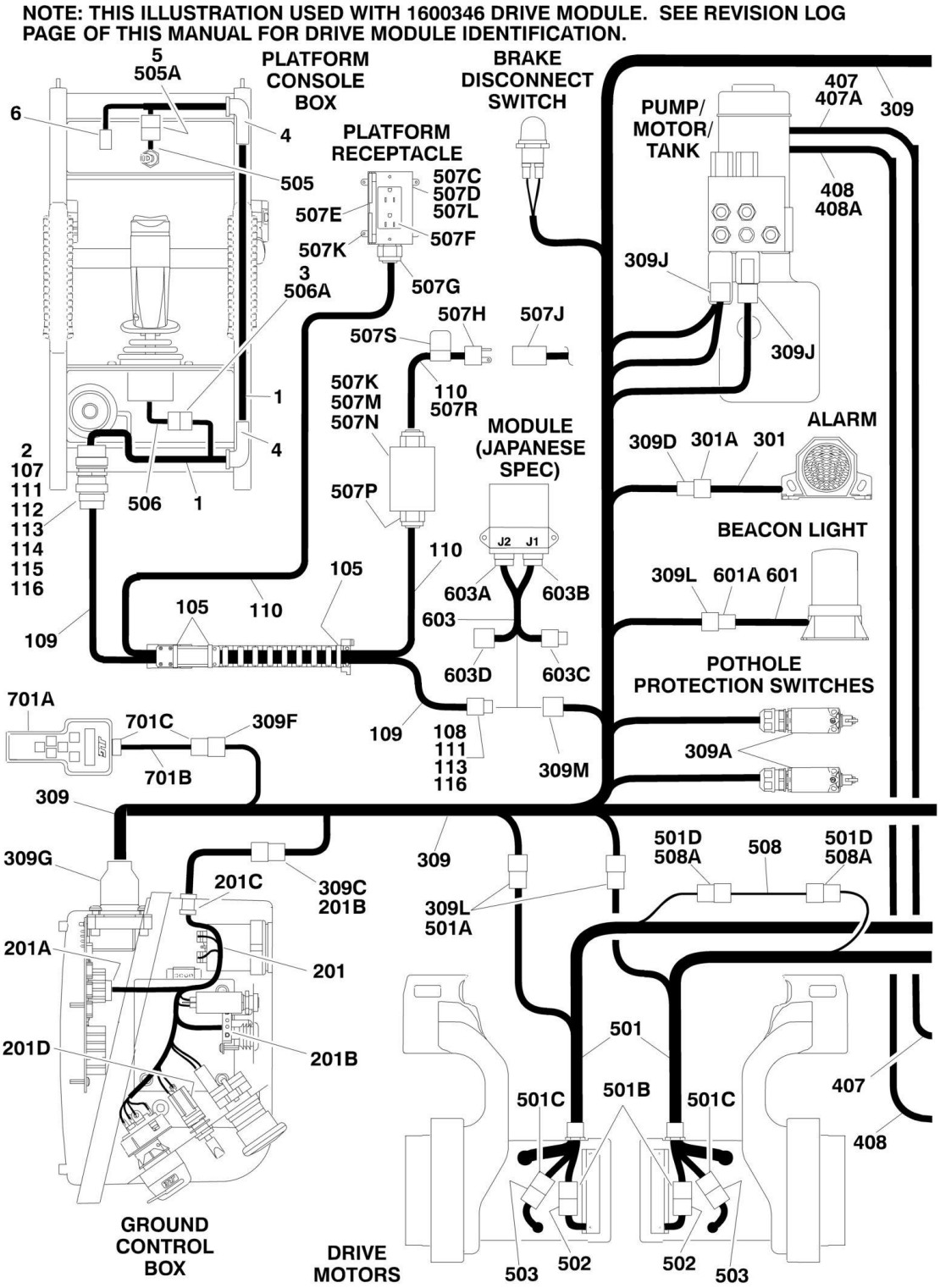

NOTE: THIS ILLUSTRATION USED WITH 1600346 DRIVE MODULE. SEE REVISION LOG PAGE OF THIS MANUAL FOR DRIVE MODULE IDENTIFICATION.

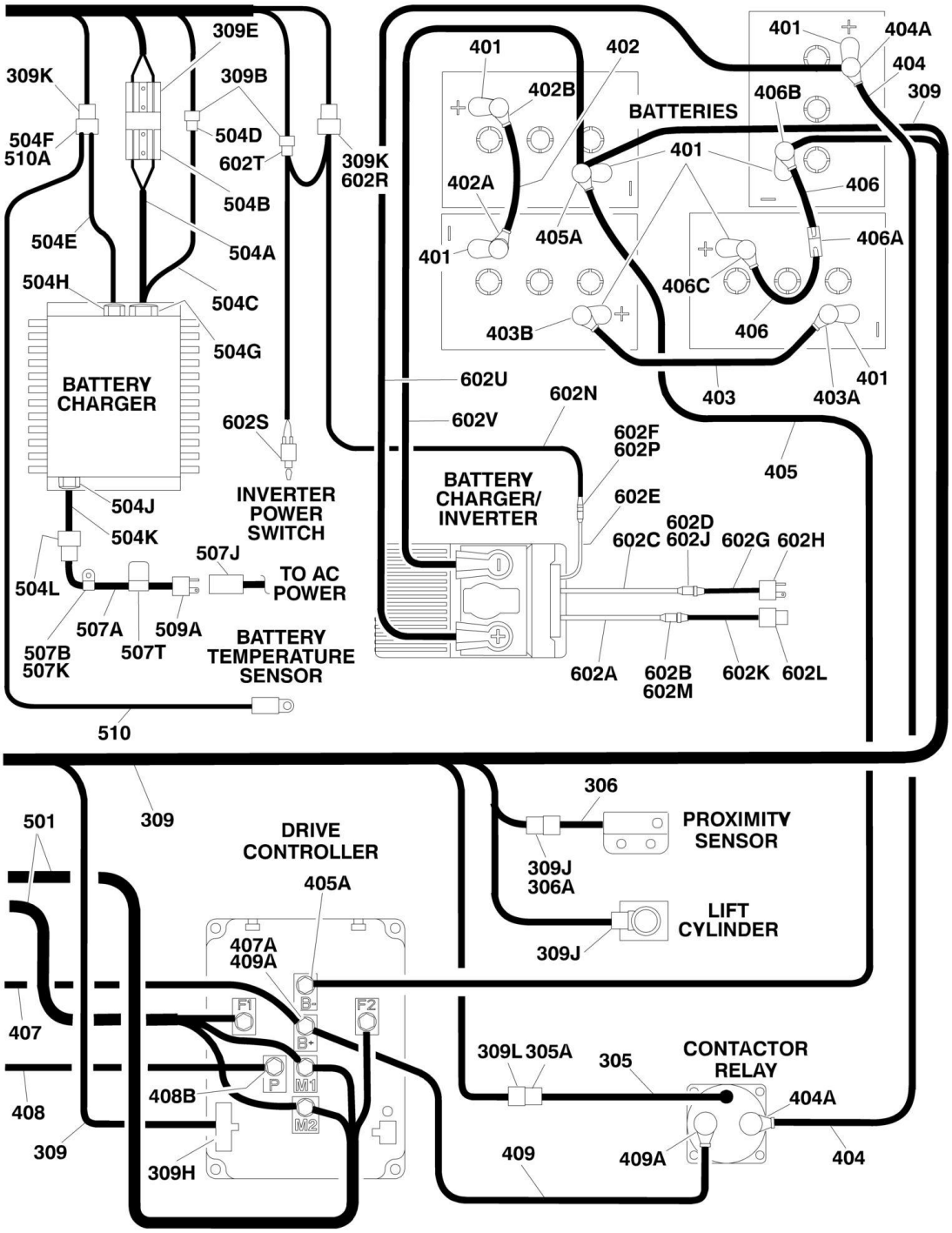

FIGURE 7-2. ELECTRICAL CONNECTORS INSTALLATION (MACHINES WITH 1600346 DRIVE MODULE)

ITEM	PART NUMBER	QTY	DESCRIPTION	REV
		Ref	**CONSOLE BOX COMPONENTS**	
1	4922870	1	Platform Box Harness	C
2	4461016	1	Connector - 14 Position	
2	4460464	9	Pin, Male	
2	4460466	5	Plug, Sealing	
2	4460496	1	Lockwasher	
2	4460497	1	Nut, Panel	
3	4460265	1	Plug, Male - 9 Position	
3	4460267	8	Pin, Male	
4	2540042	2	Grommet 90	
5	Not Available	1	Receptacle, Female - 3 Position (Molex 43640-0301)	
6	4461057	1	Plug, Male - 16 Position	
	4923503	Ref	**MAST CABLE ASSEMBLY**	H
105	4240033	3	Tie-Strap	
107	4460754	1	Connector - 14 Position	
108	4460930	1	Plug, Male - 8 Position (Gray)	
109	4923504	28 ft/8.5m	Cable, Electrical -18/5C + 18/1STP	
110	4923505	28 ft/8.5m	Cable, Electrical -14/3C	
111	2820026	AR	Tubing, Clear	
112	3730119	1	Resistor 120Ohm/.25Watt	
113	4460465	10	Socket, Female	
114	4460466	6	Plug, Sealing	
115	4460493	1	Cap, Dust	
116	4460944	6	Socket, Female	
		Ref	**GROUND CONTROL BOX COMPONENTS**	
201	4922865	1	Control Box Harness	F
201A	4460265	1	Plug, Male - 9 Position	
201A	4460268	9	Socket, Female	
201B	4460761	2	Receptacle, Female - 4 Position	
201B	4460267	8	Pin, Male	
201C	Not Available	1	Grommet (Molded in Part of Harness)	
201D	4460418	1	Connector, Female - 6 Position	
201D	4460419	3	Socket, Female	
		Ref	**GROUND CONTROL COMPONENTS**	
301	0140043	1	Alarm and Harness (Separate Harness Not Available)	
301A	4460536	1	Receptacle, Female - 3 Position	
301A	4460465	3	Socket, Female	
305	3740150	1	Contactor Relay Harness (Includes Relay)	
305A	4460891	1	Plug, Male - 2 Position	
305A	4460465	2	Socket, Female	
306	4000010	1	Proximity Harness (Includes Sensor)	
306A	4460897	1	Receptacle, Female - 2 Position	
306A	4460464	2	Pin, Male	
306A	Not Available	1	Wedge Lock - 2 Position (Deutsch WM-2P)	
309		Ref	Chassis Harness Options	
309	4923301	1	Harness used on USA Built Machines (Note: Use qty 1 each of p/ns 1001110303 & 1001115448 as replacement.) **(Prior to SN 0200195926)**	F
309	4923301	1	Harness used on Àll French Built Machines (Note: Use qty 1	F

ITEM	PART NUMBER	QTY	DESCRIPTION	REV
			each of p/ns 1001110303 & 1001115448 as replacement.)	
309	1001110303	1	Harness used on USA Built Machines **(SN 0200195926 to Present)**	B
309		Ref	Chassis Harness Wiring Diagram Options:	
309	4933341	Ref	USA Built Machines **(Prior to SN 0200195926)**	C
309	4933341	Ref	All French Built Machines	C
309	1001110304	Ref	USA Built Machines **(SN 0200195926 to Present)**	A
309A		Ref	Switch, Limit Options:	
309A	4360633	2	Switch used on USA Built Machines (Use p/n 1001115448) **(Prior to SN 0200195926)**	
309A	4360633	1	Switch used on All French Built Machines (Use p/n 1001115448)	
309A	1001109088	2	Switch used on USA Built Machines **(SN 0200195926 to Present)**	
309A	4460884	2	Plug, Male - 4 Position (Use with p/n 1001109088 Switch)	
309A	4460465	4	Socket, Female (Use with p/n 1001109088 Switch)	
309B	4460320	1	Plug, Male - 2 Position (Note: Connection to this plug used only when footswitch or battery interlock options are required)	
309B	4460226	2	Socket, Female	
309C	4460321	1	Plug, Male - 4 Position	
309C	4460227	4	Pin, Male	
309D	4460539	1	Plug, Male - 3 Position	
309D	4460464	3	Pin, Male	
309E	4460648	1	Connector, Anderson	
309F	4460761	1	Receptacle, Female - 4 Position	
309F	4460227	4	Pin, Male	
309G	4460814	1	Plug, Male - 40 Position	
309G	4460465	25	Socket, Female	
309G	4460944	6	Socket, Female (Gold)	
309G	4460466	3	Seal, Plug	
309G	0840057	1	Boot	
309H	4460870	1	Plug, Male - 12 Position	
309H	4460877	4	Pin, Male	
309J	4460891	5	Plug, Male - 2 Position	
309J	4460465	10	Socket, Female	
309K	4460894	1	Plug, Male - 6 Position	
309K	4460465	6	Socket, Female	
309L	4460897	4	Receptacle, Female - 2 Position	
309L	4460464	8	Pin, Male	
309L	3990013	1	Diode 1 Amp (Right Brake Only)	
309M	4460931	1	Receptacle, Female -8 Position	
309M	4460464	2	Pin, Male	
309M	4460943	3	Pin, Male (Gold)	
309M	0840058	1	Boot	
	2902444	Ref	**BATTERY CABLE KITS**	E
401	0840060	8	Boot, Terminal (Gray) (Covers only the Battery Terminal Base)	
402	4923324	1	Cable, Battery (Battery Positive to Battery Negative)	A
402A	Not Available	1	Boot, Terminal (Black) (1 Per Cable Assembly)	
402B	0840041	1	Boot, Terminal (Red) (1 Per Cable Assembly)	
403	4923325	1	Cable, Battery (LH Side Batteries to RH Side Batteries)	B
403A	Not Available	1	Boot, Terminal (Black) (1 Per Cable Assembly)	
403B	0840041	1	Boot, Terminal (Red) (1 Per Cable Assembly)	

ITEM	PART NUMBER	QTY	DESCRIPTION	REV
404	4923326	1	Cable, Battery (Contactor to RH Side Batteries)	A
404A	Not Available	2	Boot, Terminal (Black)	
405	4923327	1	Cable, Battery (Drive Module B- to LH Side Batteries)	A
405A	Not Available	2	Boot, Terminal (Black)	
406	4923328	1	Cable, Battery with Disconnect (Battery Positive to Battery Negative)	A
406A	Not Available	1	Connector, Anderson	
406B	Not Available	1	Boot, Terminal (Black) (1 Per Cable Assembly)	
406C	0840041	1	Boot, Terminal (Red) (1 Per Cable Assembly)	
407	4923329	1	Cable, Battery (Drive Module B+ to Pump Motor +)	A
407A	0840041	2	Boot, Terminal (Red)	
408	4923330	1	Cable, Battery (Drive Module P to Pump Motor -)	D
408A	Not Available	1	Boot, Terminal (Black) (1 Per Cable Assembly)	
408B	0840041	1	Boot, Terminal (Red) (1 Per Cable Assembly)	
409	4923331	1	Cable, Battery (Drive Module B+ to Contactor)	A
409A	0840041	2	Boot, Terminal (Red)	
		Ref	**STANDARD HARNESSES**	
501	7024770	2	Drive Motor/Brake Harness (Use p/n 1001093652)	
501A	4460891	2	Plug, Male - 2 Position (1 Per Harness)	
501A	4460465	4	Socket, Female (2 Per Harness)	
501B	Not Available	2	Plug, Male - 2 Position (1 Per Harness) (To Brake)	
501B	Not Available	4	Socket, Female (2 Per Harness) (To Brake)	
501C	Not Available	2	Plug, Male - 2 Position (1 Per Harness) (To Motor)	
501C	Not Available	4	Socket, Female (2 Per Harness) (To Motor)	
501D	4461261	2	Plug, Male - 1 Position	
501D	4460509	2	Socket, Female	
502	Not Available	2	Harness, Brake (Internal Connections - Purchase Complete Brake)	
502	Not Available	2	Receptacle, Female - 2 Position (1 Per Harness)	
502	Not Available	4	Pin, Male (2 Per Harness)	
503	Not Available	2	Harness, Motor (Internal Connections - Purchase Complete Motor)	
503	Not Available	2	Receptacle, Female - 2 Position (1 Per Harness)	
503	Not Available	4	Pin, Male (2 Per Harness)	
504		Ref	Battery Charger Components:	
504A	Not Available		DC Harness/Cord Set	
504B	4460648	1	Plug, Anderson	
504C	Not Available	1	Harness with Connector	
504D	4460424	1	Connector, Female - 2 Position (Note: Connection to this plug used only when battery interlock options are required)	
504D	4460227	2	Pin, Male	
504E	Not Available	1	Harness with Connector	
504F	4460899	1	Connector, Female - 6 Position	
504F	4460464	6	Pin, Male	
504G	Not Available	1	Connector, Strain Relief	
504H	Not Available	1	Connector, Strain Relief	
504J	Not Available	1	Connector, Strain Relief	
504K	Not Available	1	AC Harness/Cord Set	
504L	Not Available	1	Connector, Female	
505	4360539	1	Toggle Switch and Harness (No Separate Harness Available)	
505A	Not Available	1	Plug, Male - 3 Position (Molex P/N 43643-0300)	
506	Not Available	1	Joystick Harness	
506A	4460266	1	Receptacle, Female - 9 Position	
506A	4460226	8	Socket, Female	

ITEM	PART NUMBER	QTY	DESCRIPTION	REV
507		Ref	AC Power Components	
507	0274556	Ref	ANSI/CSA/Japan Specs (Supplied with ANSI Spec Plug)	F
507	0274802	Ref	ANSI Export/Australian Specs (No Plug Supplied. Plug Must Be Purchased Locally)	E
507	0274802	Ref	CE Spec (No Plug Supplied. Plug Must Be Purchased Locally)	E
507	0275772	Ref	CE Spec with 110V with IEC Yellow Receptacle and Plug and Circuit Breaker	F
507	0275773	Ref	CE Spec with 220V with IEC Blue Receptacle and Plug and Circuit Breaker	F
507	0275771	Ref	CE Spec with 220V with AFSINT 107 Keyed Ground Receptacle and Plug and Circuit Breaker	E
507	0275769	Ref	CE Spec with 220V with CEE 7 Post Ground Receptacle and Plug and Circuit Breaker (2x4 Box)	E
507	0275774	Ref	CE Spec with 220V with CEE 7 Post Ground Receptacle and Plug and Circuit Breaker (70x70 Box)	G
507	0275770	Ref	CE Spec with 220V with CEE 7 Side Ground Receptacle and Plug and Circuit Breaker (2x4 Box)	D
507	0275775	Ref	CE Spec with 220V with CEE 7 Side Ground Receptacle and Plug and Circuit Breaker (70x70 Box)	F
507		Ref	Decal - AC Power (Not Shown - Located on Rear Cover)	
507		Ref	120V AC (0274556 Installations) Options:	
507	3252761	1	USA Built Machines **(Prior to SN 0200194028)**	
507	3252761	1	French Built Machines **(Prior to SN A200009503)**	
507	1001103742	1	USA Built Machines **(SN 0200194028 to Present)**	
507	1001103742	1	French Built Machines **(SN A200009503 through A200009897)**	
507	1703464	1	120V AC - 60HZ (0275772 Installations)	
507		Ref	220V-50/60HZ (0274802, 0275769, 0275770, 0275771, 0275773, 0275774, 0275775 Installations) Options:	
507	3252507	1	USA Built Machines **(Prior to SN 0200194028)**	
507	3252507	1	French Built Machines **(Prior to SN A200009503)**	
507	1001103742	1	USA Built Machines **(SN 0200194028 to Present)**	
507	1001103742	1	French Built Machines **(SN A200009503 through A2000009897)**	
507A		Ref	Harness, AC to Battery Charger (No Serviceable Parts)	
507A		Ref	ANSI/CSA/Japan Specs	
507A	1060688	1	French Built Machines **(Prior to SN A200008736)**	
507A	1001098832	1	French Built Machines **(SN A200008736 through A2000009897)**	
507A	1060688	1	USA Built Machines **(Prior to SN 0200183666)**	
507A	1001098832	1	USA Built Machines **(SN 0200183666 through 0200189616)**	
507A	1001103257	1	USA Built Machines **(SN 0200189617 to Present)**	
507A		Ref	ANSI Export/Australian/CE Specs	
507A	1060689	1	USA Built Machines **(Prior to SN 0200194028)**	
507A	1060689	1	French Built Machines **(Prior to SN A200009503)**	
507A	1001103258	1	USA Built Machines **(SN 0200194028 to Present)**	
507A	1001103258	1	French Built Machines **(SN A200009503 through A2000009897)**	
507B	1321293	1	Clamp	
507C		Ref	AC Receptacle Box Kit Options:	
507C	2902431	1	0274556 Installations Switch Box/Receptacle Kit (Includes Items 507D-507F & 507H)	D
507C	Not Available	1	0274802 Installations (Purchase Components Locally)	
507C	0275216	1	0275772 Installations Switch Box/Receptacle Kit (Includes Items 507D-507G)	

ITEM	PART NUMBER	QTY	DESCRIPTION	REV
507C	0275217	1	0275773 Installations Switch Box/Receptacle Kit (Includes Items 507D-507G)	
507C	0275454	1	0275771 Installations Switch Box/Receptacle Kit (Includes Items 507D-507G)	
507C	0275452	1	0275769 Installations Switch Box/Receptacle Kit (Includes Items 507D-507G)	
507C	0275218	1	0275774 Installations Switch Box/Receptacle Kit (Includes Items 507D-507F, 507H & 507J) (Use p/n 1001100343)	
507C	1001141971	1	0275774 Installations Switch Box/Receptacle Kit (Includes Items 507D-507F, 507H & 507J) (Use p/n 1001100343)	
507C	0275453	1	0275770 Installations Switch Box/Receptacle Kit (Includes Items 507D-507G)	
507C	0275219	1	0275775 Installations Switch Box/Receptacle Kit (Includes Items 507D-507F, 507H & 507J) (Use p/n 1001100344)	
507C	1001141970	1	0275775 Installations Switch Box/Receptacle Kit (Includes Items 507D-507F, 507H & 507J) (Use p/n 1001100344)	
507D		Ref	Box Options:	
507D	0861731	1	0274556, 0275769, 0275770, 0275771 Installations	
507D	Not Available	1	0274802 Installations (Purchase Components Locally)	
507D	0861781	1	0275772/0275773 Installations	
507D	See Note	1	0275774/0275775 Installations (Note: Was p/n0861782 which is no longer available. Use p/n 1001100344 CEE 7 Side Ground Service Kit or p/n 1001100343 CEE 7 Post Ground Service Kit. Kits includes Box p/n 1001141967 & items 507D, 507E, 507F, 507H, 507J.)	
507E		Ref	Cover Options:	
507E	1671207	1	0274556 Installations	
507E	Not Available	1	0274802 Installations (Purchase Components Locally)	
507E	4461198	1	0275772 Installations (Includes Receptacle)	
507E	4461201	1	0275773 Installations (Includes Receptacle)	
507E	4461246	1	0275771 Installations (Includes Receptacle)	
507E	4461244	1	0275769 Installations (Includes Receptacle)	
507E	1001141968	1	1001100343 & 1001141971 Service Kits	
507E	1001141969	1	1001100344 & 1001141970 Service Kits	
507E	4461204	1	0275774 Installations (Includes Receptacle) (Use p/n 1001100343)	
507E	4461245	1	0275770 Installations (Includes Receptacle)	
507E	4461207	1	0275775 Installations (Includes Receptacle) (Use p/n 1001100344)	
507F		Ref	Receptacle Options:	
507F	4460346	1	0274556 Installations	
507F	Not Available	1	0274802 Installations (Purchase Components Locally)	
507F	4461198	1	0275772 Installations (Includes Cover)	
507F	4461201	1	0275773 Installations (Includes Cover)	
507F	4461246	1	0275771 Installations (Includes Cover)	
507F	4461244	1	0275769 Installations (Includes Cover)	
507F	1001141968	1	1001100343 & 1001141971 Service Kits	
507F	1001141969	1	1001100344 & 1001141970 Service Kits	
507F	4461204	1	0275774 Installations (Includes Receptacle) (Use p/n 1001100343)	
507F	4461245	1	0275770 Installations (Includes Cover)	
507F	4461207	1	0275775 Installations (Includes Receptacle) (Use p/n 1001100344)	
507G		Ref	Connector, Strain Relief Options:	
507G	4460662	1	0274556, 0275769, 0275770, 0275771 Installations	

ITEM	PART NUMBER	QTY	DESCRIPTION	REV
507G	Not Available	1	0274802 Installations (Purchase Components Locally)	
507G	4461257	1	0275774, 0275775 Installations (90) (USA Built Machines) **(Prior to SN 0200194028)**	
507G	4461257	1	0275774, 0275775 Installations (90) (All French Built Machines) **(Prior to SN A200009503)**	
507G	1001103471	1	0275774, 0275775 Installations (90) (USA Built Machines) **(SN 0200194028 to Present)**	
507G	1001103471	1	0275774, 0275775 Installations (90) (All French Built Machines) **(SN A200009503 through A2000009897)**	
507G	4460633	1	0275772, 0275773 Installations	
507G	4461258	Ref	Adapter, Connector (0275774, 0275775 Installations Only) (USA Built Machines) **(Prior to SN 0200194028)**	
507G	4461258	Ref	Adapter, Connector (0275774, 0275775 Installations Only) French Built Machines) **(Prior to SN A200009503)**	
507H		Ref	Plug, Male Options:	
507H	4460138	1	0274556 Installations	
507H	Not Available	1	0274802 Installations (Purchase Locally)	
507H	4461196	1	0275772 Installations	
507H	4461199	1	0275773 Installations	
507H	4461249	1	0275771 Installations	
507H	4461202	1	0275769/0275774 Installations & 1001100343/ 1001141971 Service Kits	
507H	4461205	1	0275770/0275775 Installations & 1001100344/ 1001141970 Service Kits	
507J		Ref	Receptacle, Replacement Options:	
507J	Not Available	1	0274556/0274802 Installations (Purchase Components Locally)	
507J	4461197	1	0275772 Installations	
507J	4461200	1	0275773 Installations	
507J	4461250	1	0275771 Installations	
507J	4461203	1	0275769/0275774 Installations & 1001100343/ 1001141971 Service Kits	
507J	4461206	1	0275770/0275775 Installations & 1001100344/ 1001141970 Service Kits	
507K		Ref	Hardware Options:	
507K	4190406	AR	Screw M4 x 12mm	
507K	4010408	AR	Screw M4 x 16mm	
507K	4010414	AR	Screw M4 x 30mm	
507K	0760606	AR	Screw M6 x 12mm	
507K	0760608	AR	Screw M6 x 16mm	
507K	0760612	AR	Screw M6 x 25mm	
507K	3290405	AR	Locknut M4	
507K	3290605	AR	Locknut M6	
507K	4811400	AR	Flatwasher M4	
507K	4811700	AR	Flatwasher M6	
507L		Ref	Bracket, Receptacle Box Mounting Options:	
507L	Not Required	0	0274556, 0274802, 0275769, 0275770, 0275771 Installations	
507L	0903551	1	0275772, 0275773, 0275774, 0275775 Installations	
507M	3380766	1	Shield, Circuit Breaker Mounting (Required Only on CE Spec Installations Except 0274802 Installation)	
507N	2902559	AR	Circuit Breaker Kit	E
		Ref	**Note: Required Only on CE Spec Installations Except 0274802 Installation**	
507N		Ref	Breaker, Circuit Options:	

ITEM	PART NUMBER	QTY	DESCRIPTION	REV
507N	240015	1	Breaker,Coutout **(Prior to SN A200006201)**	
507N	2400093	NLA	Breaker 16 Amp (Note: Use qty 1 each of p/ns 1001109475 & 1001109482 as replacement) **(SN A200006201 through A200009454)**	
507N	1001109475	1	Breaker 16 Amp **(SN A200009455 to Present)**	
507N	1001109482	1	Breaker 30 Amp **(SN A200009455 to Present)**	
507N	240093	1	Breaker Box **(Prior to SN 6201)**	
507N	0861880	1	Breaker Box **(SN A200006201 through A2000009897)**	
507N	250135	1	Terminal Block **(Prior to SN A200006201)**	
507N	4460957	1	Terminal Block **(SN A200006201 through A2000009897)**	
507N	4460956	1	Barrier, Terminal Block Only **(SN A200006201 to Present)**	
507P		Ref	Connector, Strain Relief Options:	
507P	4460633	2	Connector, Strain Relief **(Prior to SN A200006201)**	
507P	1001097150	2	Terminal,Strain Relief **(SN A200006201 through A2000009897)**	
507R	1060908	1000 mm	Cable, Electrical - 12/3	
507S	1001103742	1	Decal - AC to Platform	
507T	1001103743	1	Decal - AC to Charger	
508	4923602	1	Field Wire Connection Harness **(Prior to SN 0200225604, SN A200000001 to Present)**	B
508A	4461260	2	Receptacle, Female - 1 Position	
508A	4460508	2	Pin, Male	
509		Ref	Charger Plug Installations	
509	0274556	Ref	ANSI/CSA/Japan Specs (Supplied with ANSI Spec Plug)	F
509	0274802	Ref	ANSI Export/Australian Specs (No Plug Supplied. Plug Must Be Purchased Locally)	E
509	0274802	Ref	CE Spec (No Plug Supplied. Plug Must Be Purchased Locally)	C
509	0275666	Ref	CE Spec with 110V with IEC Yellow Receptacle	D
509	0275667	Ref	CE Spec with 220V with IEC Blue Receptacle	D
509	0275665	Ref	CE Spec with 220V with AFSINT 107 Keyed Ground Receptacle	C
509	0275663	Ref	CE Spec with 220V with CEE 7 Post Ground Receptacle	C
509	0275664	Ref	CE Spec with 220V with CEE 7 Side Ground Receptacle	E
509A		Ref	Plug, Male Options:	
509A	1060688	1	0274556 Installations	
509A	Not Available	1	0274802 Installations (Purchase Locally)	
509A	4461196	1	0275666 Installations	
509A	4461199	1	0275667 Installations	
509A	4461249	1	0275665 Installations	
509A	4461202	1	0275663 Installations	
509A	4461205	1	0275664 Installations	
510	1001112113	1	Battery Temperature Sensor Harness (Includes Sensor and Instructions) (Use p/n 1001127269)	
510A	4460465	2	Socket, Female	
		Ref	**OPTIONAL HARNESSES**	
601	2920161	1	Beacon Light and Harness (Separate Harness Not Available)	
601A	4460891	1	Plug, Male - 2 Position (1 Per Harness)	
601A	4460465	2	Socket, Female (2 Per Harness)	
602		Ref	Battery Charger/Inverter Components (ANSI and CSA Option Only):	
602A	Not Available	1	AC Output Harness (Internal Part of Inverter)	
602B	Not Available	1	Receptacle, Female - 4 Position (Conxall T9014)	
602C	Not Available	1	AC Input Harness (Internal Part of Inverter)	
602D	Not Available	1	Receptacle, Female - 4 Position (Conxall T9016)	

ITEM	PART NUMBER	QTY	DESCRIPTION	REV
602E	Not Available	1	Remote Control Harness (Internal Part of Inverter)	
602F	Not Available	1	Plug, Male - 8 Position (Conxall 7281-8PG-300)	
602G	4923389	1	AC Input Harness (Use p/n 1001091479) (French Built Machines) **(Prior to SN A200006146)**	A
602H	4460138	1	Plug, Male	
602J	Not Available	1	Plug, Male - 4 Position (Conxall T9017)	
602K		Ref	AC Output Harness Options:	
602K	4923390	1	Harness French Built Machines **(Prior to SN A200006146)**	D
602K	Not Required	0	Harness French Built Machines **(SN A200006146 through A2000009897)**	
602K	Not Required	0	Harness USA Built Machines	
602L	4460779	1	Receptacle, Female (French Built Machines Only) **(Prior to SN A200006146)**	
602M	1001091478	1	Plug, Male - 4 Position	
602N	4923391	1	Data Interface Harness (Internal Part of Inverter)	D
602P	Not Available	1	Plug, Male - 8 Position (Conxall 6280-8SG-318)	
602R	4460899	1	Receptacle, Female - 6 Position	
602R	4460464	4	Pin, Male	
602R	4460466	2	Plug, Seal	
602R	3990010	1	Diode 6A/600V	
602S	4360336	1	Switch, Toggle	
602T	4460424	2	Receptacle, Female - 2 Position	
602T	4460267	2	Pin, Male	
602U	4923435	1	Cable, Battery + to Inverter +	A
602V	4923436	1	Cable, Battery - to Inverter -	A
603	4923355	1	Footswitch Module Harness (Japanese Spec Only)	B
603A	4460908	1	Plug, Male - 12 Position (Gray) (Mini)	
603A	4460918	2	Socket, Female (Gold)	
603A	4460915	1	Wedge, Locking	
603B	4460909	1	Plug, Male - 12 Position (Black) (Mini)	
603B	4460918	2	Socket, Female (Gold)	
603B	4460915	1	Wedge, Locking	
603C	4460930	1	Plug, Male - 8 Position	
603C	4460465	4	Socket, Female	
603C	4460944	3	Socket, Female (Gold)	
603C	4460466	1	Plug, Seal	
603D	4460931	1	Receptacle, Female - 8 Position	
603D	4460464	5	Pin, Male	
603D	4460943	3	Pin, Male (Gold)	
		Ref	**TOOLS FOR SERVICE**	
701	2901443	1	Analyzer Kit	1
701A	1600244	1	Analyzer	
701B	1060633	1	Cable, Analyzer	1-A
701C	4460321	2	Plug, Male - 4 Position	
701C	4460226	8	Socket, Female	
702	7002821	1	Crimper, Wire (Not Shown)	
703	7002823	1	Extractor, Pin - Universal (Not Shown)	
704	4460467	AR	Extractor, Pin #16 Gauge (Not Shown)	
705	4460510	AR	Extractor, Pin #12 Gauge (Not Shown)	
706	7002828	1	Stripper, Wire (Not Shown)	
707	1001137005	1	Software Cable Kit (Not Shown)	

FIGURE 7-3. ELECTRICAL CONNECTORS INSTALLATION (MACHINES WITH 1001092456 DRIVE MODULE)

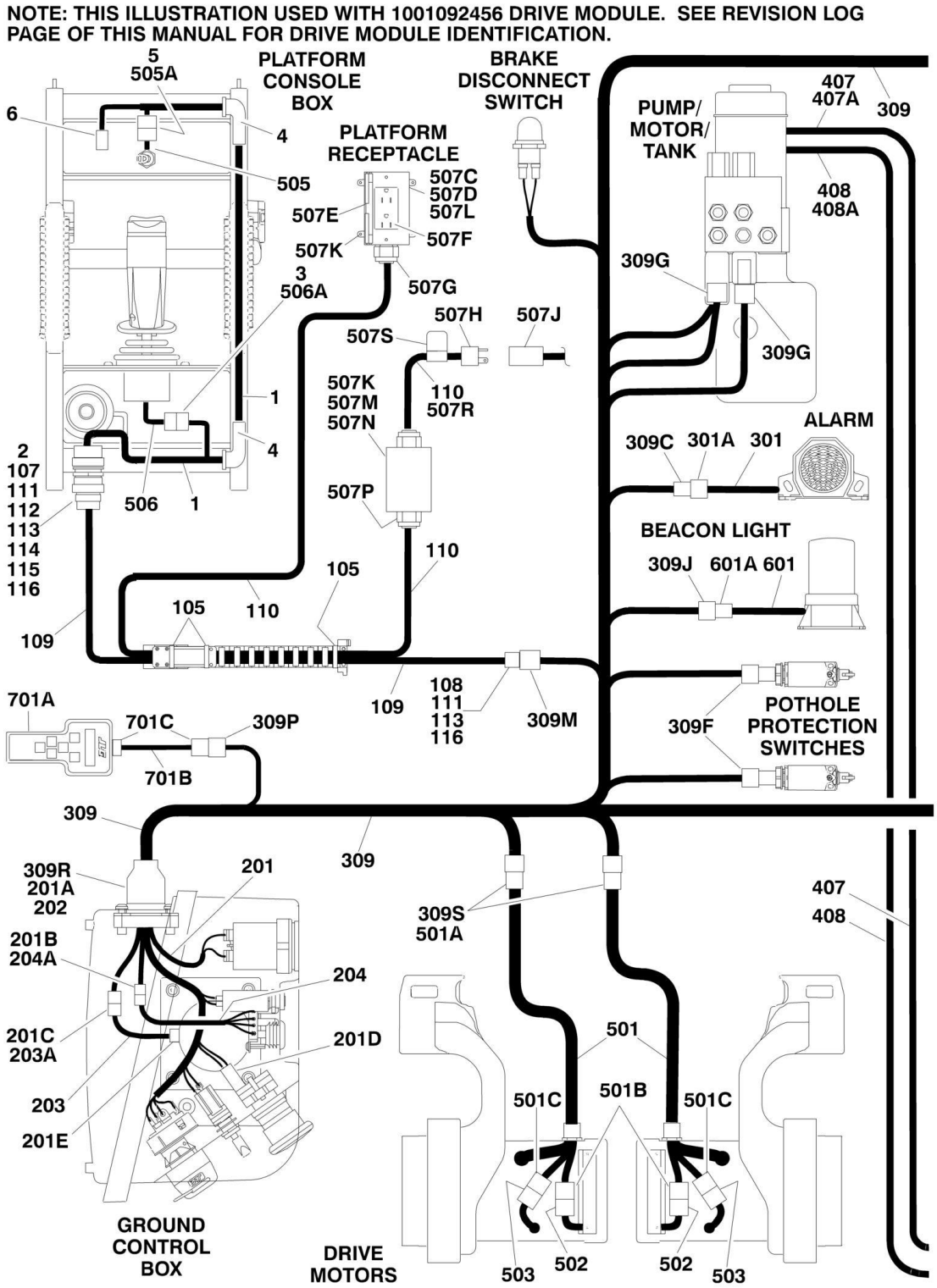

NOTE: THIS ILLUSTRATION USED WITH 1001092456 DRIVE MODULE. SEE REVISION LOG PAGE OF THIS MANUAL FOR DRIVE MODULE IDENTIFICATION.

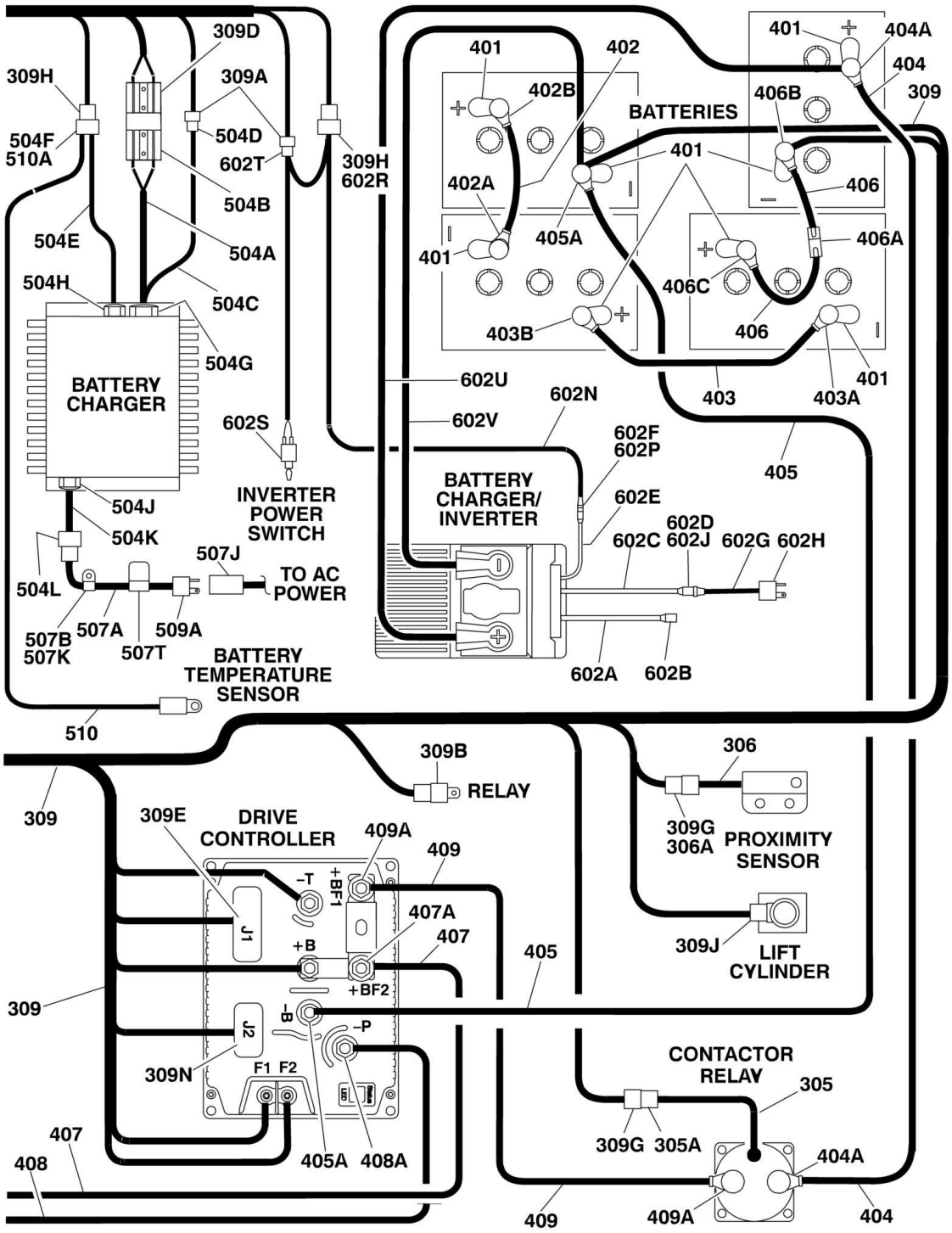

FIGURE 7-3. ELECTRICAL CONNECTORS INSTALLATION (MACHINES WITH 1001092456 DRIVE MODULE)

ITEM	PART NUMBER	QTY	DESCRIPTION	REV
		Ref	**CONSOLE BOX COMPONENTS**	
1	4922870	1	Platform Box Harness	C
2	4461016	1	Connector - 14 Position	
2	4460464	9	Pin, Male	
2	4460466	5	Plug, Sealing	
2	4460496	1	Lockwasher	
2	4460497	1	Nut, Panel	
3	4460265	1	Plug, Male - 9 Position	
3	4460267	8	Pin, Male	
4	2540042	2	Grommet 90	
5	Not Available	1	Receptacle, Female - 3 Position (Molex 43640-0301)	
6	4461057	1	Plug, Male - 16 Position	
	4923503	Ref	**MAST CABLE ASSEMBLY**	H
105	4240033	3	Tie-Strap	
107	4460754	1	Connector - 14 Position	
108	4460930	1	Plug, Male - 8 Position (Gray)	
109	4923504	28 ft/8.5m	Cable, Electrical -18/5C + 18/1STP	
110	4923505	28 ft/8.5m	Cable, Electrical -14/3C	
111	2820026	AR	Tubing, Clear	
112	3730119	1	Resistor 120Ohm/.25Watt	
113	4460465	10	Socket, Female	
114	4460466	6	Plug, Sealing	
115	4460493	1	Cap, Dust	
116	4460944	6	Socket, Female	
		Ref	**GROUND CONTROL BOX COMPONENTS**	
201	1001114935	1	Control Box Harness (Machines with Reiker Tilt Module)	B
201	1001167256	1	Control Box Harness (Machines with Parker Tilt Module)	C
201A	Not Available	1	Receptacle, Female - 18 Position	
201A	Not Available	16	Socket, Female	
201B	4460961	1	Receptacle, Female - 4 Position	
201B	4460267	4	Pin, Male	
201C	4461077	1	Plug, Male - 4 Position (Reiker Tilt Module Only)	
201C	4460928	4	Socket, Female (Reiker Tilt Module Only)	
201D	4460418	1	Receptacle, Female - 3 Position	
201D	4460419	3	Terminal	
201E	4460844	1	Plug, Male - 4 Position (Parker Tilt Module Only)	
201E	4460944	4	Socket, Female (Parker Tilt Module Only)	
202	1001114937	1	Mount, Harness Bulkhead	
203	1001169253	1	Harness, Jumper (From Kit p/n 1001169392)	
203	1001114933	NLA	Harness, Tilt Sensor (Reiker Tilt Module Only) (Use p/n 1001169392)	A
203A	4461076	1	Receptacle, Female - 4 Position (Reiker Tilt Module Only)	
203A	4460929	4	Pin, Male (Reiker Tilt Module Only)	
204	0610161	1	Harness, Charger LED (Includes PC Board)	
204A	4460321	1	Plug, Male - 4 Position	
204A	4460268	3	Socket, Female	
		Ref	**GROUND CONTROL COMPONENTS**	
301	0140043	1	Alarm and Harness (Separate Harness Not Available)	
301A	4460536	1	Receptacle, Female - 3 Position	

ITEM	PART NUMBER	QTY	DESCRIPTION	REV
301A	4460465	3	Socket, Female	
305	3740150	1	Contactor Relay Harness (Includes Relay)	
305A	4460891	1	Plug, Male - 2 Position	
305A	4460465	2	Socket, Female	
306	4000010	1	Proximity Harness (Includes Sensor)	
306A	4460897	1	Receptacle, Female - 2 Position	
306A	4460464	2	Pin, Male	
306A	Not Available	1	Wedge Lock - 2 Position (Deutsch WM-2P)	
309	1001116640	1	Chassis Harness	F
309	1001116644	1	Wiring Diagram - Chassis Harness	D
309A	4460320	1	Plug, Male - 2 Position (Note: Connection to this plug used only when footswitch or battery interlock options are required)	
309A	4460226	2	Socket, Female	
309B	1001097347	1	Relay	
309B	4460374	1	Plug, Relay	
309B	4460375	4	Terminal	
309C	4460539	1	Plug, Male - 3 Position	
309C	4460464	3	Pin, Male	
309D	4460648	1	Connector, Anderson	
309E	4460873	1	Plug, Male - 35 Position	
309E	4460871	25	Socket, Female	
309F	4460884	2	Plug, Male - 4 Position	
309F	4460465	4	Socket, Female	
309G	4460891	5	Plug, Male - 2 Position	
309G	4460465	10	Socket, Female	
309H	4460894	1	Plug, Male - 6 Position	
309H	4460465	4	Socket, Female	
309J	4460897	2	Receptacle, Female - 2 Position	
309J	4460464	4	Pin, Male	
309M	4460931	1	Receptacle, Female - 8 Position	
309M	4460464	5	Pin, Male	
309M	4460943	3	Pin, Male (Gold)	
309M	0840058	1	Boot	
309N	1001096138	1	Plug, Male - 23 Position	
309N	4460871	12	Socket, Female	
309P	4460761	1	Receptacle, Female - 4 Position	
309P	4460227	4	Pin, Male	
309R	1001115076	1	Plug, Male - 18 Position	
309R	4460465	14	Socket, Female	
309R	4460942	2	Socket, Female	
309S	1001118322	2	Connector - 6 Position	
309S	91013191	4	Terminal	
309S	4460464	8	Pin, Male	
	1001117837	Ref	**BATTERY CABLE KITS**	A
401	0840060	8	Boot, Terminal (Gray) (Covers only the Battery Terminal Base)	
402	1060998	1	Cable, Battery (Battery Positive to Battery Negative)	C
402A	Not Available	1	Boot, Terminal (Black) (1 Per Cable Assembly)	
402B	0840041	1	Boot, Terminal (Red) (1 Per Cable Assembly)	
403	4923325	1	Cable, Battery (LH Side Batteries to RH Side Batteries)	C
403A	Not Available	1	Boot, Terminal (Black) (1 Per Cable Assembly)	
403B	0840041	1	Boot, Terminal (Red) (1 Per Cable Assembly)	
404	4923326	1	Cable, Battery (Contactor to RH Side Batteries)	B

ITEM	PART NUMBER	QTY	DESCRIPTION	REV
404A	Not Available	2	Boot, Terminal (Black)	
405	1001117840	1	Cable, Battery (Drive Module B- to LH Side Batteries)	A
405A	Not Available	2	Boot, Terminal (Black)	
406	4923328	1	Cable, Battery with Disconnect (Battery Positive to Battery Negative)	B
406A	Not Available	2	Connector, Anderson	
406B	Not Available	1	Boot, Terminal (Black) (1 Per Cable Assembly)	
406C	0840041	1	Boot, Terminal (Red) (1 Per Cable Assembly)	
407	1001117841	1	Cable, Battery (Drive Module +BF2 to Pump Motor +)	A
407A	Not Available	2	Boot, Terminal (Black)	
408	1001117842	1	Cable, Battery (Drive Module P- to Pump Motor -)	A
408A	Not Available	2	Boot, Terminal (Black)	
409	1001117843	1	Cable, Battery (Drive Module B+ to Contactor)	A
409A	Not Available	2	Boot, Terminal (Black)	
		Ref	**STANDARD HARNESSES**	
501	1001118363	2	Drive Motor/Brake Harness	B
501A	1001118323	2	Connector - 6 Position	
501A	91013192	4	Socket, Female (2 Per Harness)	
501A	4460465	8	Socket, Female (4 Per Harness)	
501A	4460891	2	Plug, Male - 2 Position (1 Per Harness)	
501A	4460465	4	Socket, Female (2 Per Harness)	
501B	Not Available	2	Plug, Male - 2 Position (1 Per Harness) (To Brake)	
501B	Not Available	4	Socket, Female (2 Per Harness) (To Brake)	
501C	Not Available	2	Plug, Male - 2 Position (1 Per Harness) (To Motor)	
501C	Not Available	4	Socket, Female (2 Per Harness) (To Motor)	
502	Not Available	2	Harness, Brake (Internal Connections - Purchase Complete Brake)	
502	Not Available	2	Receptacle, Female - 2 Position (1 Per Harness)	
502	Not Available	4	Pin, Male (2 Per Harness)	
503	Not Available	2	Harness, Motor (Internal Connections - Purchase Complete Motor)	
503	Not Available	2	Receptacle, Female - 2 Position (1 Per Harness)	
503	Not Available	4	Pin, Male (2 Per Harness)	
504		Ref	Battery Charger Components:	
504A	Not Available		DC Harness/Cord Set	
504B	4460648	1	Plug, Anderson	
504C	Not Available	1	Harness with Connector	
504D	4460424	1	Connector, Female - 2 Position (Note: Connection to this plug used only when battery interlock options are required)	
504D	4460227	2	Pin, Male	
504E	Not Available	1	Harness with Connector	
504F	4460899	1	Connector, Female - 6 Position	
504F	4460464	6	Pin, Male	
504G	Not Available	1	Connector, Strain Relief	
504H	Not Available	1	Connector, Strain Relief	
504J	Not Available	1	Connector, Strain Relief	
504K	Not Available	1	AC Harness/Cord Set	
504L	Not Available	1	Connector, Female	
505	4360539	1	Toggle Switch and Harness (No Separate Harness Available)	
505A	Not Available	1	Plug, Male - 3 Position (Molex P/N 43643-0300)	
506	Not Available	1	Joystick Harness	
506A	4460266	1	Receptacle, Female - 9 Position	
506A	4460226	8	Socket, Female	
507		Ref	AC Power Components	

ITEM	PART NUMBER	QTY	DESCRIPTION	REV
507	0274556	Ref	ANSI/CSA/Japan Specs (Supplied with ANSI Spec Plug)	F
507	0274802	Ref	ANSI Export/Australian Specs (No Plug Supplied. Plug Must Be Purchased Locally)	E
507	0274802	Ref	CE Spec (No Plug Supplied. Plug Must Be Purchased Locally)	E
507	0275772	Ref	CE Spec with 110V with IEC Yellow Receptacle and Plug and Circuit Breaker	F
507	0275773	Ref	CE Spec with 220V with IEC Blue Receptacle and Plug and Circuit Breaker	F
507	0275771	Ref	CE Spec with 220V with AFSINT 107 Keyed Ground Receptacle and Plug and Circuit Breaker	E
507	0275769	Ref	CE Spec with 220V with CEE 7 Post Ground Receptacle and Plug and Circuit Breaker (2x4 Box)	E
507	0275774	Ref	CE Spec with 220V with CEE 7 Post Ground Receptacle and Plug and Circuit Breaker (70x70 Box)	G
507	0275770	Ref	CE Spec with 220V with CEE 7 Side Ground Receptacle and Plug and Circuit Breaker Box (with 2 Breakers) (2 x 4 Box) **(Prior to SN 0200224419)**	E
507	1001153734	Ref	CE Spec with 220V with CEE 7 Side Ground Receptacle and Plug and Circuit Breaker Box (with 3 Breakers) (2 x 4 Box) **(SN 0200224419 to Present)**	
507	0275775	Ref	CE Spec with 220V with CEE 7 Side Ground Receptacle and Plug and Circuit Breaker Box (with 2 Breakers) (70x70 Box) **(Prior to SN 0200224419)**	G
507	1001153735	Ref	CE Spec with 220V with CEE 7 Side Ground Receptacle and Plug and Circuit Breaker Box (with 3 Breakers) (70x70 Box) **(SN 0200224419 to Present)**	
507		Ref	Decal - AC Power (Not Shown - Located on Rear Cover)	
507	1001103742	1	120V AC (0274556 Installations)	
507	1703464	1	120V AC - 60HZ (0275772 Installations)	
507	1001103742	1	220V-50/60HZ (0274802, 0275769, 0275770, 0275771, 0275773, 0275774, 0275775 Installations) Options	
507	1701691	1	DECAL - NO STEP **(Prior to SN 0200224419)**	
507A		Ref	Harness, AC to Battery Charger (No Serviceable Parts)	
507A		Ref	ANSI/CSA/Japan Specs	
507A	1001098832	1	French Built Machines	
507A	1001103257	1	USA Built Machines	
507A	1001103258	1	ANSI Export/Australian/CE Specs	
507B	1321293	1	Clamp	
507C		Ref	AC Receptacle Box Kit Options:	
507C	2902431	1	0274556 Installations Switch Box/Receptacle Kit (Includes Items 507D-507F & 507H)	D
507C	Not Available	1	0274802 Installations (Purchase Components Locally)	
507C	0275216	1	0275772 Installations Switch Box/Receptacle Kit (Includes Items 507D-507G)	
507C	0275217	1	0275773 Installations Switch Box/Receptacle Kit (Includes Items 507D-507G)	
507C	0275454	1	0275771 Installations Switch Box/Receptacle Kit (Includes Items 507D-507G)	
507C	0275452	1	0275769 Installations Switch Box/Receptacle Kit (Includes Items 507D-507G)	
507C	0275218	NLA	0275774 Installations Switch Box/Receptacle Kit (Includes Items 507D-507F, 507H & 507J) (Use p/n 1001100343)	B
507C	0275453	1	0275770 & 1001153734 Installations Switch Box/Receptacle Kit (Includes Items 507D-507G)	
507C	0275219	NLA	0275775 & 1001153735 Installations Switch Box/Receptacle Kit (Includes Items 507D-507F, 507H & 507J) (Use p/n 1001100344)	B

ITEM	PART NUMBER	QTY	DESCRIPTION	REV
507D		Ref	Box Options:	
507D	0861731	1	0274556, 0275769, 0275770, 0275771/1001153734 Installations	
507D	Not Available	1	0274802 Installations (Purchase Components Locally)	
507D	0861781	1	0275772/0275773 Installations	
507D	See Note	1	0275774/0275775 Installations (Note: Was p/n 0861782 which is no longer available. Use p/n 1001100344 CEE 7 Side Ground Service Kit or p/n 1001100343 CEE 7 Post Ground Service Kit. Kits includes Box p/n 1001141967 & items 507D, 507E, 507F, 507H, 507J.)	
507D	1001141967	1	1001100343, 1001100344, 1001141970, 1001141971 & 1001153735 Service Kits	
507E		Ref	Cover Options:	
507E	1671207	1	0274556 Installations	
507E	Not Available	1	0274802 Installations (Purchase Components Locally)	
507E	4461198	1	0275772 Installations (Includes Receptacle)	
507E	4461201	1	0275773 Installations (Includes Receptacle)	
507E	4461246	1	0275771 Installations (Includes Receptacle)	
507E	4461244	1	0275769 Installations (Includes Receptacle)	
507E	1001141968	1	1001100343 & 1001141971 Service Kits	
507E	1001141969	1	1001100344, 1001141970 & 1001153735 Service Kits	
507E	4461204	1	0275774 Installations (Includes Receptacle) (Use p/n 1001100343)	
507E	4461245	1	0275770 & 1001153734 Installations (Includes Receptacle)	
507E	4461207	1	0275775 Installations (Includes Receptacle) (Use p/n 1001100344)	
507F		Ref	Receptacle Options:	
507F	4460346	1	0274556 Installations	
507F	Not Available	1	0274802 Installations (Purchase Components Locally)	
507F	4461198	1	0275772 Installations (Includes Cover)	
507F	4461201	1	0275773 Installations (Includes Cover)	
507F	4461246	1	0275771 Installations (Includes Cover)	
507F	4461244	1	0275769 Installations (Includes Cover)	
507F	1001141968	1	1001100343 & 1001141971 Service Kits	
507F	1001141969	1	1001100344, 1001141970 & 1001153735 Service Kits	
507F	4461204	1	0275774 Installations (Includes Receptacle) (Use p/n 1001100343)	
507F	4461245	1	0275770 & 1001153734 Installations (Includes Receptacle)	
507F	4461207	1	0275775 Installations (Includes Receptacle) (Use p/n 1001100344)	
507G		Ref	Connector, Strain Relief Options:	
507G	4460662	1	0274556, 0275769, 0275770, 0275771 Installations	
507G	Not Available	1	0274802 Installations (Purchase Components Locally)	
507G	1001103471	1	0275774, 0275775/1001153735 Installations (90)	
507G	4460633	1	0275772, 0275773 Installations	
507H		Ref	Plug, Male Options:	
507H	4460138	1	0274556 Installations	
507H	Not Available	1	0274802 Installations (Purchase Locally)	
507H	4461196	1	0275772 Installations	
507H	4461199	1	0275773 Installations	
507H	4461249	1	0275771/1001153734 Installations	
507H	4461202	1	0275769/0275774 Installations & 1001100343/ 1001141971 Service Kits	

ITEM	PART NUMBER	QTY	DESCRIPTION	REV
507H	4461205	1	0275770/0275775/1001153735/1001153734 Installations & 1001100344/ 1001141970 Service Kits	
507J		Ref	Receptacle, Replacement Options:	
507J	Not Available	1	0274556/0274802 Installations (Purchase Components Locally)	
507J	4461197	1	0275772 Installations	
507J	4461200	1	0275773 Installations	
507J	4461250	1	0275771 Installations	
507J	4461203	1	0275769/0275774 Installations & 1001100343/ 1001141971 Service Kits	
507J	4461206	1	0275770/0275775/1001153734 Installations & 1001100344/ 1001141970 Service Kits	
507K		Ref	Hardware Options:	
507K	4190406	AR	Screw M4 x 12mm	
507K	4010408	AR	Screw M4 x 16mm	
507K	4010414	AR	Screw M4 x 30mm	
507K	0760606	AR	Screw M6 x 12mm	
507K	4191406	1	Screw M6 x 12mm	
507K	0760608	AR	Screw M6 x 16mm	
507K	4191407	AR	Screw M6 x 16mm	
507K	0760612	AR	Screw M6 x 25mm	
507K	4010614	AR	Screw M6 x 30mm	
507K	3290405	AR	Locknut M4	
507K	3290605	AR	Locknut M6	
507K	4811400	AR	Flatwasher M4	
507K	4811700	AR	Flatwasher M6	
507L		Ref	Bracket, Receptacle Box Mounting Options:	
507L	Not Required	0	0274556, 0274802, 0275769, 0275770, 0275771 Installations	
507L	0903551	1	0275772, 0275773, 0275774, 0275775 Installations	
507M	3380766	1	Shield, Circuit Breaker Mounting (Required Only on CE Spec Installations Except 0274802 Installation)	
507N	2902559	AR	Circuit Breaker Kit (with 2 Breakers)	E
507N	1001152487	AR	Circuit Breaker Kit (with 3 Breakers)	B
		Ref	**Note: Required Only on CE Spec Installations Except 0274802 Installation**	
507N		Ref	Breaker, Circuit Options:	
507N	1001109475	1	Breaker 16 Amp (Box with 2 Breakers)	
507N	1001109482	1	Breaker 30 Amp (Box with 2 Breakers)	
507N	1001152479	1	Breaker 16 Amp (Box with 3 Breakers) **(Prior to SN 0200238347)**	
507N	1001189172	1	Breaker 16 Amp (Box with 3 Breakers) **(SN 0200238347 to Present)**	
507N	1001152482	1	Breaker 30m Amp (Box with 3 Breakers) **(Prior to SN 0200238347)**	
507N	1001189171	1	Breaker 30m Amp (Box with 3 Breakers) **(SN 0200238347 to Present)**	
507N	0861880	1	Breaker Box (with 2 Breakers)	
507N	1001152483	1	Breaker Box (with 3 Breakers)	
507N	4460957	1	Terminal Block (Box with 2 Breakers Only)	
507N	4460956	1	Barrier, Terminal Block (Box with 2 Breakers Only)	
507P	1001097150	2	Connector, Strain Relief	
507R	1060908	AR	Cable, Electrical - 12/3	
507S	1001103742	1	Decal - AC to Platform	
507T	1001103743	1	Decal - AC to Charger	

ITEM	PART NUMBER	QTY	DESCRIPTION	REV
509		Ref	Charger Plug Installations	
509	0274556	Ref	ANSI/CSA/Japan Specs (Supplied with ANSI Spec Plug)	F
509	0274802	Ref	ANSI Export/Australian Specs (No Plug Supplied. Plug Must Be Purchased Locally)	E
509	0274802	Ref	CE Spec (No Plug Supplied. Plug Must Be Purchased Locally)	E
509	0275666	Ref	CE Spec with 110V with IEC Yellow Receptacle	D
509	0275667	Ref	CE Spec with 220V with IEC Blue Receptacle	D
509	0275665	Ref	CE Spec with 220V with AFSINT 107 Keyed Ground Receptacle	C
509	0275663	Ref	CE Spec with 220V with CEE 7 Post Ground Receptacle	C
509	0275664	Ref	CE Spec with 220V with CEE 7 Side Ground Receptacle and	E
509A		Ref	Plug, Male Options:	
509A	1060688	1	0274556 Installations	
509A	Not Available	1	0274802 Installations (Purchase Locally)	
509A	4461196	1	0275666 Installations	
509A	4461199	1	0275667 Installations	
509A	4461249	1	0275665 Installations	
509A	4461202	1	0275663 Installations	
509A	4461205	1	0275664 Installations	
510	1001112113	1	Battery Temperature Sensor Harness (Includes Sensor and Instructions) (Use p/n 1001127269)	
510A	4460465	2	Socket, Female	
		Ref	**OPTIONAL HARNESSES**	
601	2920161	1	Beacon Light and Harness (Separate Harness Not Available)	
601A	4460891	1	Plug, Male - 2 Position (1 Per Harness)	
601A	4460465	2	Socket, Female (2 Per Harness)	
602		Ref	Battery Charger/Inverter Components (ANSI and CSA Option Only):	
602A	Not Available	1	AC Output Harness (Internal Part of Inverter)	
602B	Not Available	1	Receptacle, Female - 4 Position (Conxall T9014)	
602C	Not Available	1	AC Input Harness (Internal Part of Inverter)	
602D	Not Available	1	Receptacle, Female - 4 Position (Conxall T9016)	
602E	Not Available	1	Remote Control Harness (Internal Part of Inverter)	
602F	Not Available	1	Plug, Male - 8 Position (Conxall 7281-8PG-300)	
602G	1001091479	1	AC Input Harness	A
602H	4460138	1	Plug, Male	
602J	Not Available	1	Plug, Male - 4 Position (Conxall T9017)	
602N	4923391	1	Data Interface Harness (Internal Part of Inverter)	D
602P	Not Available	1	Plug, Male - 8 Position (Conxall 6280-8SG-318)	
602R	4460899	1	Receptacle, Female - 6 Position	
602R	4460464	4	Pin, Male	
602R	4460466	2	Plug, Seal	
602R	3990010	1	Diode 6A/600V	
602S	4360336	1	Switch, Toggle	
602T	4460424	2	Receptacle, Female - 2 Position	
602T	4460267	2	Pin, Male	
602U	4923435	1	Cable, Battery + to Inverter +	A
602V	4923436	1	Cable, Battery - to Inverter -	A
		Ref	**TOOLS FOR SERVICE**	
701	2901443	1	Analyzer Kit	1
701A	1600244	1	Analyzer	
701B	1060633	1	Cable, Analyzer	1-A
701C	4460321	2	Plug, Male - 4 Position	

ITEM	PART NUMBER	QTY	DESCRIPTION	REV
701C	4460226	8	Socket, Female	
702	7002821	1	Crimper, Wire (Not Shown)	
703	7002823	1	Extractor, Pin - Universal (Not Shown)	
704	4460467	AR	Extractor, Pin #16 Gauge (Not Shown)	
705	4460510	AR	Extractor, Pin #12 Gauge (Not Shown)	
706	7002828	1	Stripper, Wire (Not Shown)	
707	1001137005	1	Software Cable Kit (Not Shown)	

SECTION 8 - DECALS

FIGURE 8-1. DECAL INSTALLATION

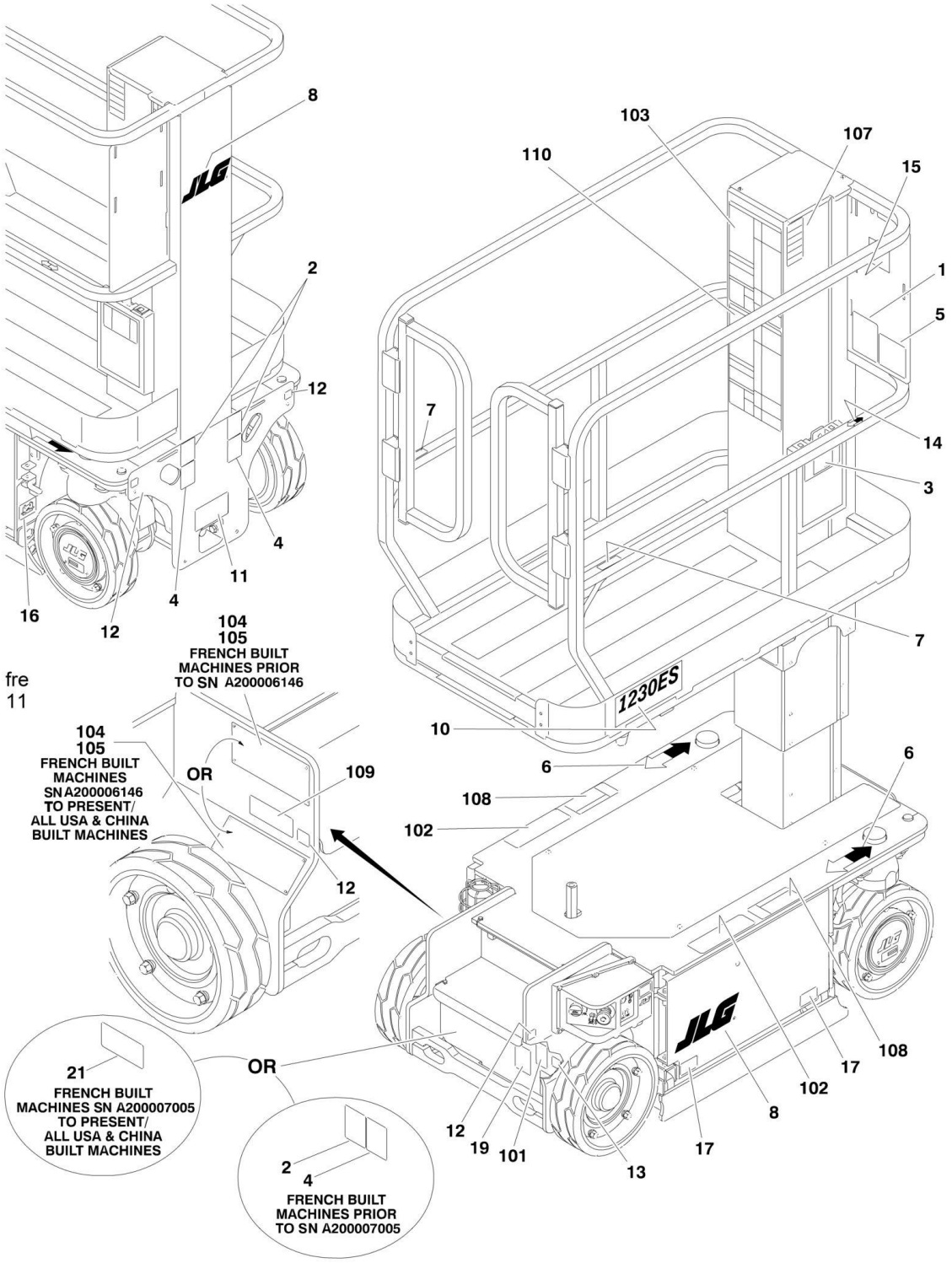

FIGURE 8-1. DECAL INSTALLATION

ITEM	PART NUMBER	QTY	DESCRIPTION	REV
	0274914	Ref	**COMMON DECALS INSTALLATION**	J
1		Ref	Decal - Patent Options:	
1	1700584	1	USA Built Machines **(Prior to SN 0200205404)**	
1	1700584	1	French Built Machines **(Prior to SN A200009897)**	
1	1001131270	1	USA Built Machines **(SN 0200205404 to Present)**	
2	1703811	4	Decal - Lifting Lug (French Built Machines) **(Prior to SN A200007005)**	
3	1701640	1	Decal - Manual	
4	1703814	4	Decal - Tie Down (French Built Machines) **(Prior to SN A200007005)**	
5	Not Available	1	Decal - Barcode	
6	1703687	2	Decal - Directional Arrow	
7	1704277	2	Decal - Lanyard Attach	
8	1705781	AR	Decal - JLG	
10	1706667	2	Decal - 1230ES Designation	
11	1706670	1	Decal - Manual Descent	
12	1706671	4	Decal - Wheel Load	
13	1706679	1	Decal - Brake Release	
14	1703819	1	Decal - Directional Arrow	
15	1705692	1	Decal - Control Box Location	
16	1706740	1	Decal - Battery Disconnect	
17	1704016	1	Decal - Forklift	
18	1704412	2	Decal - Hydraulic Oil (Not Shown - Located on Top of Hydraulic Tank)	
19	1701644	1	Decal - Battery Charger (USA Built Machines) **(Prior to SN 0200194028)**	
19	1701644	1	Decal - Battery Charger (French Built Machines) **(Prior to SN A200009503)**	
20	1001092907	1	Decal - Quick Start (Not Shown - Located on top of Platform Console Box)	
21	4110226	4	Decal - Lift Point/Tie Down (French Built Machines) **(SN A200007005 through A200009897)**	
21	4110226	4	Decal - Lift Point/Tie Down (All USA Built Machines)	
21	4110226	4	Decal - Lift Point/Tie Down (All China Built Machines)	
		Ref	**COUNTRY SPEC DECALS INSTALLATION**	
	0274860	Ref	**ANSI and ANSI Export Specs (English Language)**	H
	0274913	Ref	**ANSI Export Spec (Chinese/English Languages)**	G
	0274912	Ref	**ANSI Export Spec (Portuguese/Spanish Languages)**	G
	0274911	Ref	**ANSI Export Spec (Spanish/English Languages)**	G
	0274910	Ref	**ANSI Export Spec (Japanese Language)**	D
	0275906	Ref	**ANSI Export Spec (Korean Language)**	C
	0274909	Ref	**Australian Spec**	D
	0274908	Ref	**CE Spec (All Languages)**	E
	0274882	Ref	**CSA Spec (French/English Languages)**	I
101		Ref	Decal - Warning Fire Hazard Options:	
101	1703785	1	ANSI and ANSI Export Specs (English Language)	
101	1704344	1	ANSI Export Spec (Chinese/English Language)	
101	1705803	1	ANSI Export Spec (Japanese Language)	
101	1707022	1	ANSI Export Spec (Korean Language)	
101	1704341	1	ANSI Export Spec (Portuguese/Spanish Language)	
101	1704339	1	ANSI Export Spec (Spanish/English Language)	

ITEM	PART NUMBER	QTY	DESCRIPTION	REV
101	1705803	1	Australian Spec	
101	1705803	1	CE Spec (All Languages)	
101	1704340	1	CSA Spec (French/English Languages)	
102		Ref	Decal - Crushing Hazard Options:	
102	1703786	2	ANSI Spec (English Language)	
102	1707146	2	ANSI Spec (Chinese/English Language)	
102	1705099	2	ANSI Export Spec (Japanese Language)	
102	1707158	2	ANSI Export Spec (Korean Language)	
102	1707144	2	ANSI Spec (Portuguese/Spanish Language)	
102	1707143	2	ANSI Spec (Spanish/English Language)	
102	1705099	2	Australian Spec	
102	1705099	2	CE Spec (All Languages)	
102	1707145	2	CSA Spec (French/English Languages)	
103		Ref	Decal - Instruction/Warning Options:	
103	1706676	1	ANSI and ANSI Export Specs (English Language)	
103	1706683	1	ANSI Export Spec (Chinese/English Language)	
103	1706686	1	ANSI Export Spec (Japanese Language)	
103	1707156	1	ANSI Export Spec (Korean Language)	
103	1706684	1	ANSI Export Spec (Portuguese/Spanish Language)	
103	1706682	1	ANSI Export Spec (Spanish/English Language)	
103	1706686	1	Australian Spec	
103	1706686	1	CE Spec (All Languages)	
103	1706676	1	CSA Spec (French/English Languages)	
104	2080057	4	Fastener	
105	Not Available	1	Nameplate - Serial Number	
107		Ref	Decal - Legend Options:	
107	1705686	1	ANSI and ANSI Export Specs (English Language)	
107	1705946	1	ANSI Export Spec (Chinese/English Language)	
107	Not Required	0	ANSI Export Spec (Japanese Language)	
107	1706057	1	ANSI Export Spec (Korean Language)	
107	1705726	1	ANSI Export Spec (Portuguese/Spanish Language)	
107	1705720	1	ANSI Export Spec (Spanish/English Language)	
107	Not Required	0	Australian Spec	
107	Not Required	0	CE Spec (All Languages)	
107	1705723	1	CSA Spec (French/English Languages)	
108		Ref	Decal - Danger Electrocution/Warning Options:	
108	1706832	1	ANSI and ANSI Export Specs (English Language)	
108	1707142	1	ANSI Export Spec (Chinese/English Language)	
108	Not Required	0	ANSI Export Spec (Japanese Language)	
108	1707157	1	ANSI Export Spec (Korean Language)	
108	1707139	1	ANSI Export Spec (Portuguese/Spanish Language)	
108	1707140	1	ANSI Export Spec (Spanish/English Language)	
108	Not Required	0	Australian Spec	
108	1706078	1	CE Spec (All Languages)	
108	1707141	1	CSA Spec (French/English Languages)	
109		Ref	Decal - CSA Options:	
109	1705303	1	CSA Spec Only	
109	Not Required	0	All Specs Except CE Spec	
110		Ref	Decal - Instruction/Warning Options:	
110	Not Required	0	ANSI and ANSI Export Specs (English Language)	
110	1706676	1	ANSI Export Spec (Chinese/English Language)	

ITEM	PART NUMBER	QTY	DESCRIPTION	REV
110	Not Required	0	ANSI Export Spec (Japanese Language)	
110	1706676	1	ANSI Export Spec (Korean Language)	
110	1706682	1	ANSI Export Spec (Portuguese/Spanish Language)	
110	1706676	1	ANSI Export Spec (Spanish/English Language)	
110	Not Required	0	Australian Spec	
110	Not Required	0	CE Spec (All Languages)	
110	1706681	1	CSA Spec (French/English Languages)	
	1001149794	1	Decal Kit (ANSI Spec Only) (Includes Items 1, 3, 6, 7, 8, 10-21, 101-103, 107 & 108)	

SECTION 9 - RECOMMENDED SERVICE PARTS STOCK

FIGURE 9-1. MODEL 1230ES STANDARD PARTS

ITEM	PART NUMBER	QTY	DESCRIPTION	REV
	Note	Ref	**Note: The following list will service one machine (built to current production per date on the front cover) with emergency repair parts which can be installed in the field. Parts from the list should be replaced when inventory is depleted to keep service parts stock supplied. For further information, contact your JLG dealer or the JLG Industries Parts Department.**	
		Ref	**STANDARD PARTS**	
	70000668	1	Breather	
	3740150	1	Relay	
	4000010	1	Sensor, Proximity	
	4360387	1	Switch, Push Button	
	4360328	1	Switch, Toggle	
	4360069	1	Breaker, Circuit - 10 Amp	
	2860030	1	Key, Replacement	
	4360475	1	Switch, Mushroom	
	1001134438	1	Controller, Drive	
	4360538	1	Switch and Membrane	
	4360539	1	Switch, Toggle	
	7020500	1	Switch, Steer Rocker	
	7020501	1	Switch, Push Button	
	1001097347	1	Relay	

FIGURE 9-2. MODEL 1230ES VARIABLE PARTS

ITEM	PART NUMBER	QTY	DESCRIPTION	REV
	Note	Ref	**Note: The following list will service one machine (built to current production per date on the front cover) with emergency repair parts which can be installed in the field. Parts from the list should be replaced when inventory is depleted to keep service parts stock supplied. For further information, contact your JLG dealer or the JLG Industries Parts Department.**	
		Ref	**VARIABLE PARTS**	
	1001109088	1	Switch, Limit (Machines with 1001092456 Drive Controller)	
	1001092456	1	Drive Module	
	0610161	1	LED PC Board	
	4360469	1	Switch, Key (ANSI/ANSI Export/Australian Specs)	
	4360470	1	Switch, Key (CE Spec)	
	1810140	1	Tilt Control Module	
	1001091965	1	Control Module (Platform)	
	3990010	2	Diode 6 Amp (With Inverter Option)	

FIGURE 9-3. MODEL 1230ES MAINTENANCE KITS

ITEM	PART NUMBER	QTY	DESCRIPTION	REV
	Note	Ref	**Note: The following list will service one machine (built to current production per date on the front cover) with emergency repair parts which can be installed in the field. Parts from the list should be replaced when inventory is depleted to keep service parts stock supplied. For further information, contact your JLG dealer or the JLG Industries Parts Department.**	
		Ref	**MAINTENANCE KITS**	
	1001101328	1	3600432 Pump/Motor/Tank Assembly	
	Not Available	1	1001101831 & 1001101832 Pump/Motor/Tank Assemblies	

SECTION 10 - SPECIAL OPTIONS

FIGURE 10-1. SPECIAL OPTIONS

ITEM	PART NUMBER	QTY	DESCRIPTION	REV
	Note	Ref	**Note: This list is to accommodate machines ordered with special equipment. Options may not be applicable to all models. For more specific parts information contact JLG Parts Department.**	
		Ref	**SPECIAL OPTIONS LIST**	
		Ref	**Decal Options**	
	0274843	Ref	**Decals - Hertz(ANSI and CSA Specs Only)**	
	0274846	Ref	**Decals - Home Depot(ANSI and CSA Specs Only)**	
	1001175797	Ref	**Decals - National Equipment Services (NES)**	
	0274847	Ref	**Decals - Nations Rent(ANSI and CSA Specs Only)**	
	1001103245	Ref	**Decals - RSC(ANSI and CSA Specs Only)**	
	0274848	Ref	**Decals - Sam's Club(ANSI and CSA Specs Only)**	
	0274845	Ref	**Decals - Sunbelt(ANSI and CSA Specs Only)**	
	0274844	Ref	**Decals - United Rentals(ANSI and CSA Specs Only)**	
		Ref	**Electrical Connector Kits**	
	1001148902	Ref	Amp/Tyco Electrical Connector Kit	
	1001148903	Ref	Deutsch DT Electrical Connector Kit	
	1001148904	Ref	Deutsch HD Electrical Connector Kit	
	1001148905	Ref	Packard Electrical Connector Kit	
	1001148906	Ref	Various Electrical Connectors Kit	
		Ref	**Fluids**	
	520109	Ref	Hydraulic Oil - Alvea Nervofluid 15	
	2300028	Ref	Hydraulic Oil - Mobile DTE 10 Excel 15 (Bulk)	
	70010346	Ref	Hydraulic Oil - Mobile DTE 10 Excel 15 (1 Gallon)	
	2300042	Ref	Hydraulic Oil - Mobil EAL Envirosyn 32 (Biodegradeable)	
	3020039	Ref	Lubricant - Loctite Moly Paste	
		Ref	**Footswitch Installation Options (Japanese Spec)**	
	0274839	Ref	**Footswitch with 16000346 Drive Module**	
	1600423	1	Controller Module	
	4360623	1	Footswitch	
	1001116647	Ref	**Footswitch with 1001092456 Drive Module**	
	4360623	1	Footswitch	
		Ref	**Maintenance Kit Options (Includes Filter and 1 Gallon of Hydraulic Oil)**	
	1001101328	1	3600432 Pump/Motor/Tank Assembly	
	Not Available	1	1001101831 & 1001101832 Pump/Motor/Tank Assemblies	
	1001094004	Ref	**Mast Prop Installation**	
	1001145189	Ref	**Platform for One Person Installation (Australian Spec Only)**	
		Ref	**Tools for Service**	
	7002821	1	Crimper, Wire	
	7002823	1	Extractor, Pin - Universal	
	4460467	AR	Extractor, Pin #16 Gauge	
	4460510	AR	Extractor, Pin #12 Gauge	
	7004275	1	Installer, Cylinder Seal - 1in	
	7004276	1	Installer, Cylinder Seal - 1 1/2in	
	7002826	1	Installer, Cylinder Seal - 2in	
	7016654	1	Screwdriver, Magnetic	
	7002822	1	Screwdriver, Potentiometer	
	7002828	1	Stripper, Wire	

ITEM	PART NUMBER	QTY	DESCRIPTION	REV
	2901443	1	Analyzer Kit	
	2915230	1	Battery Charger Reprogram Controller Kit	
	1001137005	1	Software Cables Kit	

PART NUMBER INDEX

PART NUMBER INDEX

0060084 19
0100011 ..... 21, 45, 52
0100019 ..... 11, 45
0100035 19
0100040 ..... 46, 47
0100048 ..... 32, 41
0140011 55
0140043 ..... 31, 78, 88
0272778 55
0272780 ..... 31, 35
0273444 ..... 31, 35
0273841 57
0274549 11
0274550 11
0274552 ..... 23, 45, 52
0274553 53
0274554 55
0274555 31
0274556 ..... 81, 84, 91, 94
0274558 21
0274560 ..... 23, 47
0274561 41
0274562 21
0274563 21
0274564 19
0274567 ..... 45, 53
0274581 ..... 28, 71
0274778 31
0274791 ..... 35, 38, 57
0274802 ..... 81, 84, 91, 94
0274839 110
0274843 110
0274844 110
0274845 110
0274846 110
0274847 110
0274848 110
0274860 99
0274882 99
0274908 99
0274909 99
0274910 99
0274911 99
0274912 99
0274913 99
0274914 99
0275216 ..... 81, 91
0275217 ..... 82, 91
0275218 ..... 82, 91
0275219 ..... 82, 91
0275452 ..... 82, 91
0275453 ..... 82, 91
0275454 ..... 82, 91
0275663 ..... 84, 94
0275664 ..... 84, 94
0275665 ..... 84, 94
0275666 ..... 84, 94
0275667 ..... 84, 94
0275769 ..... 81, 91
0275770 ..... 81, 91
0275771 ..... 81, 91
0275772 ..... 81, 91
0275773 ..... 81, 91
0275774 ..... 81, 91
0275775 ..... 81, 91
0275906 99
0380025 ..... 35, 37
0400215 41
0400237 21
0400238 21
0440236 67
0440263 ..... 11, 19
0610161 ... 35, 37, 88, 106
0630580 11
0630587 ..... 19, 41
0630606 11
0641416 52
0700615 32
0700616 46
0700618 ..... 45, 52
0760606 ..... 83, 93
0760608 ..... 46, 83, 93
0760610 46
0760612 ..... 83, 93
0760614 23
0760808 57
0760812 ..... 21, 45
0761016 ..... 11, 28
0761217 45
0771217 45
0771219 45
0801530 ..... 45, 46
0801532 46
0801533 46
0801534 46
0840041 .... 79, 80, 89, 90
0840057 79
0840058 ..... 79, 89
0840060 ..... 79, 89
0861731 ..... 82, 92
0861747 41
0861748 41
0861781 ..... 82, 92
0861880 ..... 84, 93
0903551 ..... 83, 93
0903594 11
0903595 11
0940088 ..... 23, 52
1001091102 52
1001091153 55
1001091279 55
1001091393 56
1001091396 56
1001091478 85
1001091479 94
1001091965 ..... 56, 106
1001091967 56
1001091968 56
1001092165 ..... 45, 47
1001092456 ..... 32, 106
1001092743 ..... 11, 16
1001092907 99
1001093652 17
1001094004 110
1001095304 47
1001096138 89
1001097150 ..... 84, 93
1001097347 ..... 89, 104
1001098653 .... 23, 45, 52
1001098727 .... 45, 52, 53
1001098728 ..... 45, 46
1001098729 53
1001098730 46
1001098731 46
1001098732 46
1001098733 47
1001098832 ..... 81, 91
1001100141 52
1001100142 52
1001100163 47
1001100170 47
1001100176 47
1001100630 52
1001100631 52
1001100633 .... 23, 45, 52
1001100634 52
1001100840 11
1001100918 52
1001100947 52
1001101322 52
1001101328 28, 108, 110
1001101362 ..... 28, 71
1001101831 .... 27, 28, 71
1001101832 ..... 27, 71
1001101833 71
1001102349 12
1001102351 12
1001102353 12
1001102354 12
1001102858 ..... 45, 46
1001103245 110
1001103257 ..... 81, 91
1001103258 ..... 81, 91
1001103471 ..... 83, 92
1001103742 ... 81, 84, 91, 93
1001103743 .... 21, 84, 93
1001109088 .. 19, 79, 106
1001109475 ..... 84, 93
1001109482 ..... 84, 93
1001110303 ..... 32, 79
1001110304 79
1001112111 21
1001112112 41
1001112113 ..... 84, 94
1001114467 11
1001114879 74
1001114929 ..... 31, 37
1001114931 ..... 31, 37
1001114933 ..... 38, 88
1001114935 ..... 38, 88
1001114937 ..... 38, 88
1001115076 89
1001116638 31
1001116639 31
1001116640 ..... 32, 89
1001116644 89
1001116647 110
1001117837 ..... 41, 89
1001117838 41
1001117840 90
1001117841 90
1001117842 90
1001117843 90
1001118216 57
1001118322 89
1001118323 90
1001118359 ..... 11, 16
1001118363 ..... 17, 90
1001118433 11
1001127269 41
1001131270 99
1001134438 104
1001137005 ... 85, 95, 111
1001141967 92
1001141968 ..... 82, 92
1001141969 ..... 82, 92
1001141970 82
1001141971 82
1001145189 110
1001148902 110
1001148903 110
1001148904 110
1001148905 110
1001148906 110
1001149794 101
1001152479 93
1001152482 93
1001152483 93
1001152487 93
1001153734 91
1001153735 91
1001155025 41
1001155029 41
1001155030 41
1001156211 46
1001165284 38
1001165286 38
1001165315 37
1001166194 ..... 31, 37
1001166196 ..... 32, 37
1001166255 38
1001166824 31
1001166827 31
1001167256 ..... 38, 88
1001169253 88
1001175797 110
1001180090 37
1001189171 93
1001189172 93
1060633 ..... 85, 94
1060688 ..... 81, 84, 94
1060689 81
1060908 ..... 84, 93
1060998 89
1180404 47
1271646 47
1321293 ..... 81, 91
1321682 11
1380156 55
1380159 57
1580050 52
1600244 ..... 85, 94
1600345 ..... 55, 59
1600346 32
1600402 ..... 55, 61
1600419 35
1600423 110
1671098 55
1671105 ..... 35, 37
1671124 ..... 35, 38
1671161 57
1671207 ..... 82, 92
1684458 ..... 11, 67, 71

1684469 ..... 47, 65, 71
1700584 99
1701640 99
1701644 99
1701691 91
1703464 ..... 81, 91
1703687 99
1703785 99
1703786 100
1703811 99
1703814 99
1703819 ..... 56, 99
1704016 99
1704277 99
1704339 99
1704340 100
1704341 99
1704344 99
1704412 99
1705099 100
1705303 100
1705676 55
1705686 100
1705692 99
1705696 ..... 35, 37
1705697 ..... 35, 37
1705698 ..... 35, 37
1705720 100
1705723 100
1705726 100
1705781 99
1705803 ..... 99, 100
1705946 100
1706057 100
1706078 100
1706667 99
1706670 99
1706671 99
1706676 ..... 100, 101
1706679 99
1706681 101
1706682 ..... 100, 101
1706683 100
1706684 100
1706686 100
1706740 99
1706749 21
1706750 21
1706765 21
1706832 100
1707022 99
1707139 100
1707140 100
1707141 100
1707142 100
1707143 100
1707144 100
1707145 100
1707146 100
1707156 100
1707157 100
1707158 100
1810140 106
1870188 74
2080040 ..... 52, 53
2080043 ..... 45, 52
2080057 100
2144605 ..... 27, 67, 71
2144609 ..... 65, 71
2144610 ..... 27, 71
2221086 ..... 28, 71
2300028 110
2300042 110
2400093 84
240015 84
240093 84
2410021 52
2420172 ..... 35, 37
250135 84
2540042 ..... 78, 88
2560179 55
2600281 52
2755003 71
2760115 55
2780266 ..... 11, 12
280013 52
2820026 ..... 78, 88
2820239 21
2860030 ..... 35, 37, 104
2901443 ..... 85, 94, 111
2902341 57
2902431 ..... 81, 91
2902439 47
2902444 ..... 41, 79
2902559 ..... 83, 93
2915039 35
2915230 ..... 21, 111
2920161 ..... 21, 84, 94
3010145 19
3010146 19
3010147 19
3010152 19
3010153 19
3010164 11
3010165 11
3010166 11
3020039 ..... 41, 110
3160329 ..... 11, 16, 17
3252507 81
3252761 81
3290405 .... 19, 47, 83, 93
3290605 ... 19, 23, 32, 41, 45, 47, 83, 93
3290606 52
3290805 ..... 23, 52, 57
3291005 ..... 11, 28
3291205 45
3300423 12
3300473 56
3321005 38
3331211 45
3340968 56
3380475 56
3380599 41
3380600 41
3380604 23
3380605 47
3380612 47
3380619 23
3380625 57
3380766 ..... 83, 93
3391408 41
3423189 19
3423230 ..... 11, 19
3423231 19
3423235 11
3423236 11
3423243 41
3423303 11
3450406 12
3510876 53
3520072 52
3520193 ..... 35, 37
3575919 23
3576089 53
3600432 ..... 27, 28, 71
3730119 ..... 78, 88
3740150 ... 32, 78, 89, 104
3760348 ..... 11, 19
3760463 11
3820019 ..... 45, 47
3820037 ..... 45, 52
3841143 11
3841703 19
3900258 47
3900333 56
3900336 ..... 35, 37
3900338 ..... 35, 37
3900339 ..... 35, 37
3900356 ..... 35, 37
3900357 47
3900392 32
3990010 ..... 85, 94, 106
3990013 79
4000006 35
4000010 ... 32, 78, 89, 104
4010408 ..... 83, 93
4010412 47
4010414 ..... 83, 93
4010415 19
4010614 93
4010618 52
4031509 47
4031709 19
4060865 21
4071095 52
4071111 45
4110226 99
4160160 19
4160203 56
4160214 41
4160220 46
4160222 19
4160223 19
4190406 ..... 83, 93
4191306 56
4191406 .... 21, 46, 47, 52, 93
4191407 ..... 56, 93
4191409 56
4191706 ..... 21, 32
4191708 ..... 23, 32
4220233 52
4220258 19
4220286 41
4220307 32
4220308 19
4240018 11
4240033 ..... 47, 78, 88
4240147 28
4240153 32
4340739 ..... 35, 37
4341144 21
4341256 47
4360069 ..... 35, 37, 104
4360328 ..... 35, 37, 104
4360336 ..... 85, 94
4360387 ..... 32, 104
4360469 ..... 35, 37, 106
4360470 ..... 35, 37, 106
4360475 ... 35, 37, 56, 104
4360538 ..... 56, 104
4360539 ... 56, 80, 90, 104
4360623 110
4360633 ..... 19, 79
4420070 ..... 23, 52, 53
4420072 52
4460138 .... 83, 85, 92, 94
4460226 ... 59, 79, 80, 85, 89, 90, 95
4460227 ... 59, 79, 80, 89, 90
4460265 ..... 59, 78, 88
4460266 ..... 59, 80, 90
4460267 .... 78, 85, 88, 94
4460268 ..... 78, 88
4460320 ..... 79, 89
4460321 .... 79, 85, 88, 94
4460346 ..... 82, 92
4460374 89
4460375 89
4460418 ..... 78, 88
4460419 ..... 78, 88
4460424 .... 80, 85, 90, 94
4460464 ... 78, 79, 80, 85, 88, 89, 90, 94
4460465 ... 78, 79, 80, 84, 85, 88, 89, 90, 94
4460466 ... 78, 79, 85, 88, 94
4460467 ..... 85, 95, 110
4460493 ..... 78, 88
4460496 ..... 78, 88
4460497 ..... 78, 88
4460508 84
4460509 80
4460510 ..... 85, 95, 110
4460536 ..... 78, 88
4460539 ..... 79, 89
4460633 ..... 83, 84, 92
4460648 .... 79, 80, 89, 90
4460662 ..... 82, 92
4460754 ..... 78, 88
4460761 ..... 78, 79, 89
4460779 85
4460814 79
4460844 88
4460870 79
4460871 89
4460873 89
4460877 79
4460884 ..... 79, 89
4460891 ... 78, 79, 80, 84, 89, 90, 94
4460894 ..... 79, 89
4460897 ..... 78, 79, 89
4460899 .... 80, 85, 90, 94
4460908 85

PART NUMBER INDEX

4460909 85
4460915 85
4460918 85
4460928 88
4460929 88
4460930 ..... 78, 85, 88
4460931 ..... 79, 85, 89
4460942 89
4460943 ..... 79, 85, 89
4460944 ..... 78, 79, 85, 88
4460956 ..... 84, 93
4460957 ..... 84, 93
4460961 88
4461016 ..... 78, 88
4461057 ..... 78, 88
4461076 88
4461077 88
4461196 ..... 83, 84, 92, 94
4461197 ..... 83, 93
4461198 ..... 82, 92
4461199 ..... 83, 84, 92, 94
4461200 ..... 83, 93
4461201 ..... 82, 92
4461202 ..... 83, 84, 92, 94
4461203 ..... 83, 93
4461204 ..... 82, 92
4461205 ..... 83, 84, 93, 94
4461206 ..... 83, 93
4461207 ..... 82, 92
4461244 ..... 82, 92
4461245 ..... 82, 92
4461246 ..... 82, 92
4461249 ..... 83, 84, 92, 94
4461250 ..... 83, 93
4461257 83
4461258 83
4461260 84
4461261 80
4520565 11
4568738 56
4569225 19
4569238 19
4640858 65
4700042 ..... 45, 47
4740468 12
4740523 11
4740524 11
4740562 21
4751000 38
4811400 ..... 19, 83, 93
4811700 ... 19, 21, 23, 41, 42, 46, 52, 53, 83, 93
4811702 46
4811900 52
4812100 41
4922865 ..... 35, 78
4922870 ..... 56, 78, 88
4923301 ..... 32, 78
4923324 79
4923325 ..... 79, 89
4923326 ..... 80, 89
4923327 80
4923328 ..... 80, 90
4923329 80
4923330 80
4923331 80
4923355 85
4923389 85
4923390 85
4923391 ..... 85, 94
4923435 ..... 85, 94
4923436 ..... 85, 94
4923503 .... 46, 47, 78, 88
4923504 ..... 78, 88
4923505 ..... 78, 88
4923602 ..... 12, 84
4933341 79
520109 110
5241200 45
70000082 61
70000084 61
70000191 16
70000383 17
70000661 27
70000662 27
70000663 27
70000664 27
70000665 27
70000666 27
70000667 27
70000668 ..... 27, 104
70000669 27
70000670 27
70000671 27
70000672 27
70000673 27
70000674 27
70000675 27
70000676 27
70000683 61
70000684 61
70000685 61
70000686 61
70000721 65
70000722 65
70000723 65
70000725 65
70000726 65
70000727 65
70000728 65
70000729 65
70000730 65
70000731 65
70000732 65
70000733 65
70000734 65
70000735 65
70000737 65
70000738 67
70000739 67
70000741 67
70000742 67
70000743 67
70000790 16
70000791 16
70000792 17
70001250 61
70001251 61
70001252 61
70001253 61
70001254 65
70001265 17
70001347 17
70001739 16
70001949 17
70002308 17
70002682 32
70002683 32
70002720 65
70003486 53
70003650 61
70010346 110
7002821 ..... 85, 95, 110
7002822 110
7002823 ..... 85, 95, 110
7002826 110
7002828 ..... 85, 95, 110
7003790 59
7004275 110
7004276 110
7011025 27
7011997 59
7016319 21
7016372 21
7016654 110
7020175 ..... 35, 37, 56
7020176 ..... 35, 38, 56
7020500 ..... 59, 104
7020501 ..... 59, 104
7020551 59
7020552 59
7020553 59
7020554 59
7020555 59
7020556 59
7024747 17
7024748 17
7024749 17
7024750 17
7024756 17
7024757 16
7024758 17
7024770 ..... 17, 80
7024771 17
7024772 17
7024773 17
7024785 17
7024786 16
7024787 17
7027365 61
7027367 61
7027765 61
7027766 61
8310625 45
8990147 53
91013191 89
91013192 90

3121223

An Oshkosh Corporation Company

JLG Industries, Inc.
1 JLG Drive
McConnellsburg PA. 17233-9533
USA
Phone: +1-717-485-5161
Customer Support Toll Free: 1-877-554-5438
Fax: +1-717-485-6417

JLG Worldwide Locations

JLG Industries (Australia)
P.O. Box 5119
11 Bolwarra Road
Port Macquarie
N.S.W. 2444
Australia
Phone: +61 2 65811111
Fax: +61 2 65813058

JLG Latino Americana Ltd.
Rua Antonia Martins Luiz, 580
Distrito Industrial João Narezzi
13347-404 Indaiatuba - SP
Brazil
Phone: +55 19 3936 8870
Fax: +55 19 3935 2312

JLG Industries (UK) Ltd
Bentley House
Bentley Avenue
Middleton
Greater Manchester
M24 2GP
England
Phone: +44 (0)161 654 1000
Fax: +44 (0)161 654 1001

JLG France SAS
Z.I. de Baulieu
47400 Fauillet
France
Phone: +33 (0)5 53 88 31 70
Fax: +33 (0)5 53 88 31 79

JLG Deutschland GmbH
Max-Planck-Str. 21
D - 27721 Ritterhude-Ihlpohl
Germany
Phone: +49 (0)421 69 350 20
Fax: +49 (0)421 69 350 45

JLG Equipment Services Ltd.
Rm 1107 Landmark North
39 Lung Sum Avenue
Sheung Shui N.T.
Hong Kong
Phone: +852 2639 5783
Fax: +852 2639 5797

JLG Industries (Italia) s.r.l.
Via Po. 22
20010 Pregnana Milanese - MI
Italy
Phone: +39 029 359 5210
Fax: +39 029 359 5845

JLG Europe B.V.
Polaris Avenue 63
2132 JH Hoofddorp
The Netherlands
Phone: +31 (0)23 565 5665
Fax: +31 (0)23 557 2493

JLG Polska
Ul. Krolewska
00-060 Warsawa
Poland
Phone: +48 (0)914 320 245
Fax: +48 (0)914 358 200

Plataformas Elevadoras
JLG Iberica, S.L.
Trapadella, 2
P.I. Castellbisbal Sur
08755Castellbisbal, Barcelona
Spain
Phone: +34 93 772 4 700
Fax: +34 93 771 1762

JLG Sverige AB
Enkopingsvagen 150
Box 704
SE - 176 27 Jarfalla
Sweden
Phone: +46 (0)850 659 500
Fax: +46 (0)850 659 534

www.jlg.com